affinity
led lighting

Sanford™
Maine

AMERICAN BUILT

ASSEMBLED WITH PRIDE
BY US VETERANS
IN DOVER, NEW HAMPSHIRE

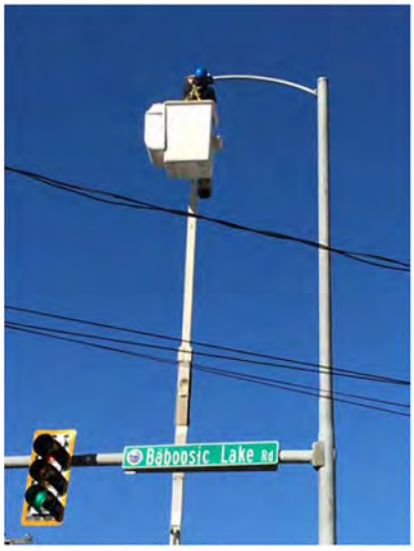

Improvements To The City Streetlight System

City of Sanford, Maine

Introductory Cover Letter
- Company Profile

Proposal Form

Detailed Energy Model
- Smart Ready and Verizon Networked

Tax Exempt Municipal Lease Purchase

Conceptual Schedule

Key Personnel

Client Reference and testimonials

Similar Turnkey Projects in ME and NH

Approach
- Design
- Digital Inventory
- Technology Procurement
- Smart Controls
- Installation & Maintenance
- Construction Administration
- Value Added

GIS (project tracking, lighting design analysis, installation dashboard)
- Project Management

10 year Warranty - w/ 1 Years of Field Labor

Elimination of Packaging Waste

Cut Sheets

- Fixtures - Fuses - Smart System

Affinity - MMA Advertisement

affinit led lighting

AMERICAN BUILT

ASSEMBLED WITH PRIDE BY US VETERANS IN DOVER, NEW HAMPSHIRE

November 6th, 2019

Dear Friends at the City of Sanford:

We are honored to submit this proposal for the City of Sanford's LED street light conversion. All information contained in this response accurately describes the services we provide.

We, Affinity LED Light LLC (Affinity LED) are a local company founded in 2012 in Portsmouth, New Hampshire and currently headquartered in the Washington Street Mills in downtown Dover.

Our view of doing business is to support our clients to reduce operational spending through energy and lighting maintenance cost reductions, while providing improved quality of light and lowering greenhouse gas emissions to improve air quality and public health in our local communities. **We founded our company on this belief… that *Doing Well and Doing Good* are not mutually exclusive ideas**.

Our business model is unique, in that we take ownership of the entire customer value chain… from product development and manufacturing **(We are New England's *only* LED Lighting Manufacturer)**, to engaging regional utility partners, to end-to-end turnkey **"boots on the ground" project management**. Doing business with Affinity LED assures you one responsible point of contact before, during and after your community's lighting efficiency measures have been installed. **We place the highest value on our relationships and our local "hands-on" partnerships with our clients.**.. one that sets us apart and is vital to your long-term satisfaction over the lifetime of the equipment. ***There isn't another company in the industry who does what we do, the way we do it!***

We have recently been selected by your Maine neighbors in Augusta, Berwick, Chelsea, Eliot, Fairfield, Farmingdale, Gardiner, Hallowell, Kittery, Monson, N. Berwick, Randolph, Tremont, Waterville & Winslow. Augusta, Gardiner, Fairfield and Hallowell are installing complete networked street lighting with smart controls. We are also currently engaged with many more Maine communities who are at various stages of planning for converting their CMP Co. and EMERA Maine street lights and hope you will join us, too. In New Hampshire, we have **successfully installed more LED street lights, been competitively selected more times (most bid awards) and completed more municipal LED street lighting conversions than all other industry providers combined**. Completed NH street light conversion projects include Antrim, Bedford, Berlin, Bethlehem, Claremont, Conway, Dover **(including NH's first project with networked street lighting and smart controls)**, Exeter, Epping, Farmington, Franconia, Gilford, Gorham, Greenland, Hampstead, Henniker, Jaffrey, Keene, Lisbon, Merrimack, Milford, New Castle, Newfields, Newington, Newmarket, North Hampton, Peterborough, Pittsfield, Portsmouth, Rochester, Somersworth, Swanzey, Stratham and Whitefield. Additionally, we're under contract and currently proceeding next with Brookline, Hampton, Hollis, Plaistow, Rindge, Wilton and all NHDOT Highways and Turnpikes roadway lighting statewide.

Our S900D Series of Cobrahead street lights provide **leading edge LED technology**, with rated **lifetimes exceeding 120,000 hours** of operation. **Assembled locally at our UL approved manufacturing facility in Dover, NH** with a **workforce of U.S. Veterans**, we are fortunate to be **producing "best-in-class" street lighting** while providing **employment opportunities to those who have served and protected our nation**. Further, **all Affinity LED street and area lighting products come with a 10-year warranty**. Our Warranty Statement is attached.

For the purpose of this proposal, we have used your recently provided CMP Co. billing information and CMP Co. provided Net Book Value (NBV) to provide a **full energy model and cost details for converting the City's 835 CMP Co. owned street lights**. We fully acknowledge that our desired deliverable is a **"custom designed retrofit"**, the result of performing an independent and certified lighting design analysis. Consequently, the energy model and cost details may increase or decrease contingent on the agreed lighting plan. We have not included any information for the conversion of any City-owned metered street lighting.

Here are the project highlights:

· **Total Project Cost of $285,501** for converting Sanford's 835 current CMP Co. street light fixtures to "Smart Ready" LED street lighting, avg. $341.92 per fixture*, inclusive of all equipment and installation services, **with American-Built street and area lighting assembled locally in Dover, NH by a workforce of U.S. Veterans.**
CMP Co.'s required NBV payment for municipal acquisition is excluded in these numbers.

*Installation services include: **a)** a highly capable CMP Co. approved contractor team including fully flashed bucket and trailing vehicle, lineman, certified flagger and support staff, **b)** elimination of Solid Waste (product packaging) through the use of reusable totes and packing materials throughout the installation process, **c)** disconnection, fuseholder and fuse installation, led equipment installation and reconnection, and **d)** complete recycling and disposal of all old legacy equipment, including certificate of disposal for hazardous waste materials.

· **Current stated Net Book Value (NBV) of $52,196 for Sanford's street lighting municipal acquisition was provided by the City of Sanford.** This value will be updated prior to the City's municipal acquisition of the current street lighting assets from CMP Co. with our guidance.
· **Total Project Cost of $337,697 "All-In",** includes all equipment & installation services and NBV payment. ($285,501 + $52,196 = $337,697)
· **Estimated Annual Savings $127,244** for converting 835 current CMP Co. street lights, a reduction of 91.4% from the current annual tariff cost of $139,184. Cumulative Savings over 10 years = $1,272,440 (which is the warranty period) & Cumulative Savings over the life of the fixtures (20 years) = $2,544,879.
· **Annual Energy Savings = -303,793 kWh,** a reduction of 74.9% from the City's current consumption of 405,701 kWh. Cumulative Savings over 10 years = -3,037,934 kWh & Cumulative Savings over the life of the fixtures (20 years) = -6,075,868 kWh.
· **Annual CO2 Abatement = -249.2 tons,** 10 yrs = -2,492 tons, 20 yrs = -4,984 tons.
Lowering greenhouse gas emissions improves air quality and public health in our communities.
· **We estimate a Simple Payback of 2.65 years on this LED Conversion ($337,697 All-In / $127,244 Annual Savings).** This is VERY GOOD.
· In this proposal, 828 fixtures (99%) will be our **American-Built S900D & P900D series cobraheads and area lights, each proudly assembled by US Veterans in our UL certified manufacturing site in Dover, NH.**

We've also included a **Networked Controls** version of our proposal...

· **The Total Cost to add the industry's leading-edge Verizon Netsense Network is $98,416 for converting all current CMP Co.-owned fixtures to Smart Controlled Cellular "Networked" LED street lights**, avg. $118.86 per fixture.
· **Total 'Networked' Project Cost of $436,112 "All-In"**, includes all equipment, installation services, a fully commissioned City-wide Verizon Netsense network and CMP Co.'s NBV payment. ($285,501 + $98,416 + $52,196 = $436,112)
· **We estimate a Simple Payback of 3.43 years on a complete Smart Controlled "Networked" LED street light conversion ($436,112 All-In / $127,244 Annual Savings).**

We are <u>your local company</u>, with products locally assembled and serviced just 30 minutes from Sanford's City Hall.

Upon being successfully selected for your community's LED conversion, we will proceed with a comprehensive investment-grade field audit, complete with GIS-based collection tools to fully confirm the actual streetlight assets and reconcile any inventory discrepancies with CMP Co. We will coordinate an independent and certified **"designed retrofit" lighting plan** according to functional roadway classifications (local, collector, arterial/majors) and intersections (local/local, local/collector, collector/collector, etc.) and location of sensitive receptors (schools, hospitals). We'll also identify and recommend critical areas where pole spacing improvements may provide a higher level of uniformity and safety. Once the lighting plan is confirmed and installation begins, we will use our real-time GIS-based tracking tools to track real-time progress, to update your street lighting inventory and to ensure CMP Co. billing is converted from current rates to the new LED rate.

As demonstrated in our response package, we understand the complexities of street lighting conversions and specifically, your individual community's project. To ensure we **meet or exceed your expectations**, we have assembled a **"Partners of Choice" team of experts to fulfill our end-to-end turnkey commitment to you** as outlined in this response:

Installation and Maintenance - Our highly capable crews are **experienced CMP Co. approved contractors** having all requisite training, certifications, equipment and insurance to safely perform the required operations of disconnection, fuseholder, fuse and fixture installation and reconnection. The installation service is included in our proposal at no additional cost to the City. Under the current tariff, ongoing maintenance can be performed by a broader set of qualified contractors, providing **more opportunities for utilizing local O&M contractors on an as-needed basis**. **Affinity LED will support the City of Sanford to develop and implement the best O&M process and operational plan.**

Tax-Exempt Lease Purchase Financing - **Affinity LED has partnered with Municipal Leasing Consultants (MLC)** to help your community get the equipment and technology you need to continue providing the best possible services, in the most cost-effective way. MLC has a track record of success and a strong commitment to helping American communities achieve their goals. **A detailed proposal of payment structures for multiple terms lengths for both our Smart-Ready and Verizon Netsense Fully-Networked options is enclosed.**

Recycling and Disposal – We are contracting with URT - Universal Recycling Technologies in Dover, NH to provide **safe, secure, certified disposal and recycling of waste materials**. This service is included in our proposal at no additional cost to the City.

Supply Chain – Our focus and expertise gives us ultimate control of our products and **we make no compromises**. To ensure consistent performance over their expected lifetime, we are carefully choosing the best combination of **industry leading branded components and materials**, and **locally assembling** our Cobrahead street lights and Shoebox flood lights here in Dover, NH. **The result is both a quality and price/ value proposition that is difficult for others to match.**

affinit led lighting

AMERICAN BUILT

ASSEMBLED WITH PRIDE BY US VETERANS IN DOVER, NEW HAMPSHIRE

Our S900D Cobrahead Series Components**:**

- Revolutionary Patented ***Multi-Volt DOB*** Technology Extends Fixture Lifetime
- New MJT High Powered Series LEDs provide **Industry Leading Efficiency and Lifetimes**
- **Night Sky Friendly** (zero uplight) with **integrated backshield**
- **Reduced-Glare Optical Lenses** in standard IESNA Type photometric distributions
- Tool-Less Entry with **Connect-Safe™ for Lineman Friendly Installation**
- **Smart Ready** with 7-pin Photocontrol Receptacle and 0-10V Dimming Capability
- **UL compliance** for traceable components
- Using all-metal molded A360 Die-Cast Aluminum Housing *and* Housing Door components, 16mm Stainless Steel hinge bolts and a tool-less entry mechanically secured door latch, we've ensured a safe and secure door when the fixture is open, and a fitted closure when latched. That is very important for **a fixture designed to last 20+ years here in the Northeast.**
- All Stainless Steel screws and fittings are **marine grade corrosion resistant**.

We are aligned and ready to add the Most Important Partner to our Team… the City of Sanford, Maine.
We look forward to engaging with all of you on this important project.

Yours truly,

Steven R. Lieber
President & Founder, Affinity LED Light LLC

Mailing:
Affinity LED Light LLC
133 Islington Street
Portsmouth, NH 03801
Fax: 603-590-8897

Office & Warehouse & Assembly:
Affinity LED Lighting
1 Washington Street, Unit # 525
Dover, NH 03820
Phone: 978-378-LED8

Your Key Contacts Directory:

Steve Lieber –
Principal Contact
cell: 603-828-8919
steve@affinityledlight.com

John Branagan –
Director - Lead Project Manager
cell: 603-475-1564
jb@affinityledlight.com

CITY OF SANFORD, MAINE

IMPROVEMENTS TO THE CITY STREETLIGHT SYSTEM

BID DATE: WEDNESDAY, NOVEMBER 6, 2019 @ 11:00 AM
PRE-BID: WEDNESDAY, OCTOBER 2, 2019 @ 11:00 AM

PROPOSAL FORM

TO: Ian Houseal, Director of Community
Development City of Sanford
City Hall, 919 Main Street
Sanford ME 04073

Having carefully examined the existing conditions affecting the work, we, the undersigned, hereby agree to provide financing options, labor, material, supplies, equipment, facilities, disposal, photometric analysis, digital reports, processing for all utility rebates and rate schedules, and maintain the streetlight system in strict accordance with, the Specifications dated **September 12, 2019** as prepared by the City of Sanford and that the undersigned will accept in full payment thereof of the following sums and schedules to wit:

1)	Audit / Project Design Phase (audit and project design per fixture installed)	$ **14.00** /fixture

2)	Construction Phase (labor per fixture to install cobra head-type luminaire on utility poles including all associated equipment / fixture) (excluding Police Department Traffic Detail where required.)	$ **105.44** /fixture

3)	Closeout Phase (closeout of the project per fixture installed)	$ **0.00** /fixture

4)	System Maintenance Phase		
	Routine Maintenance (describe inclusions and exceptions) ***This is a highly controversial subject. Given the extreme low failure rates of current LED technology, 10 year equipment warranty, 1 year labor warranty, and CMP's updated contractor requirements, we strongly recommend the City defer provisioning contracted costs for ongoing/routine maintenance until having a discussion and understanding of both the opportunities and risks related to O&M for Municipal-owned lighting under CMP Co.**		
	Year 1 (lump sum for routine maintenance/fixture)	$ **0.00**	/fixture
	Year 2 (lump sum for routine maintenance/fixture)	$ *	/fixture
	Year 3 (lump sum for routine maintenance/fixture)	$ *	/fixture
	Year 4 (lump sum for routine maintenance/fixture)	$ *	/fixture
	Year 5 (lump sum for routine maintenance/fixture)	$ *	/fixture
	Damage and emergency maintenance (describe inclusions and exceptions)		
	Labor (specify units) (repair damaged or emergency maintenance of fixture)	$ *	/~~fixture~~
	Materials mark-up (percentage)	*	%

5)	Luminaires and Equipment:		
	Cobra-head style luminaires including associated equipment (propose up to six models including all associated equipment installed)		
	1.	**Affinity S900D-18W-30K-T2-GR**	$ **153.00** /fixture
	2.	**Affinity S901D-50W-30K-T2-GR**	$ **203.00** /fixture
	3.	**Affinity S902D-75W-30K-T2-GR**	$ **221.00** /fixture
	4.	**Affinity S904D-120W-30K-T2-GR**	$ **356.00** /fixture
	5.	**Affinity P903D-100W-30K-T3-BR-TNM**	$ **299.00** /fixture
	6.	**Affinity P904D-150W-30K-T3-BR-TNM**	$ **459.00** /fixture
	Decorative fixture retrofits (OPTIONAL BID) (labor and materials per fixture for each type of retrofit fixture)		standard -
	1.	Main St, Sanford **Affinity PT6DS-36W-30K**	$ **77.00** /fixture
	2.	Central Park, Sanford	$ /fixture
	3.	Main St, Springvale	$ /fixture
	4.		$ /fixture
	Brackets necessary for new streetlight locations (propose up to three brackets including all associated equipment installed)		
	1.		$ /bracket
	2.		$ /bracket
	3.		$ /bracket
	Miscellaneous material mark-up where not otherwise stated (percentage)		%

List all Sub-Contractors:
GIS: VHB (Vanasse Hangen Brustlin, Inc), Bedford, NH
Installation: Coutts Bros, Randolph, ME
Recycling: Universal Recycling, Dover, NH

The undersigned certifies that the prices above include the cost of all work to complete the project as herein described, whether specifically stated or not.

The undersigned estimates completion of the work by:	**June 30, 2020**
The undersigned acknowledges the receipt of addenda #:	**#1 & #2**

The undersigned further agrees that after notification by the City of the acceptance of his/her proposal, he/she will execute a contract with the City within thirty (30) days, Saturdays, Sundays and holidays excepted, and that he/she will commence the work within one hundred twenty (120) days after the execution of the contract unless otherwise specified in Supplemental Specifications or directed by the City in writing, and that he/she will prosecute the work to its completion.

The undersigned hereby further declares that the only person or parties interested in this proposal as principals are named below; that the proposal is made without any connection with any other person or party making any proposal for the same work; and that no person acting for or employed by the City of Sanford is directly or indirectly interested in this proposal or in any contract which may be made under it or in profits expected to arise therefrom, except as provided by the City Charter. The full names and addresses of all persons or parties interested in this proposal as principals are named below; (Give first and last names in full; and in case of a corporation, give names and addresses of President, Treasurer and Manager; and in case of a partnership, give names and addresses of members):

Steven R. Lieber, President, Founder & Member, Affinity LED Light LLC
Affinity LED Light LLC, 133 Islington St., Unit 8, Portsmouth, NH 03801
Affinity LED Lighting, 1 Washington Street Unit #5121, Dover, NH 03820

FIRM NAME	**Affinity LED Light LLC**
INDIVIDUAL NAME	**Steven R. Lieber**
TITLE	**President & Founder, Member**
LEGAL ADDRESS	**Affinity LED Light LLC**
	133 Islington Street, Unit 8, Portmouth, NH 03801
PLACE OF BUSINESS	**Affinity LED Lighting**
	1 Washington Street, #5121, Dover, NH 03820
FIRM'S IRS ID #	**46-2959719**
DATE	**November 6, 2019**
TELEPHONE #	**978-378-5338, ext. 700**
FAX #	**603-590-8897**
E-MAIL ADDRESS	**steve@affinityledlight.com**
SIGNATURE	

SANFORD, ME (CMP) "SMART READY" LED STREETLIGHT CONVERSION PROPOSAL

Updated: Nov. 6, 2019

Municipality	Account Number	ANNUAL HOURS
Sanford, ME	3501-5349-430	4,260

ELECTRIC SUPPLY*: $0.067800 per kwh — *CONSTELLATION NEW ENERGY SUPPLY COST QUOTED FROM PROVIDED SANFORD CMP BILL*

RATE SL - DELIVERY ONLY SERVICE: $0.049367 per kwh

ELECTRIC SUPPLY*: $0.067800 per kwh

MUNICIPAL STREET LIGHTING SUMMARY / CURRENT LIGHTING

Current Lighting Description	Fixture Qty	Existing Rated Watts	ANNUAL kWh per fixture	TOTAL ANNUAL KWH	DELIVERY CHARGES: Delivery Service (RATE SL Monthly Rate Per Luminaire)	DELIVERY CHARGES: Lighting Equipment (RATE SL Monthly Rate Per Luminaire)	ELECTRIC SUPPLY (355 monthly hrs X fixture rated watts/1000 X electric rate per kwh)	ANNUAL Cost Per Fixture	TOTAL ANNUAL COST
	835								
50HPS CUT OFF COBRA	72	65	277	19,937	$1.14	$9.67	$1.56	$148.49	$10,692
70HPS OPEN SUBURBAN	1	95	405	405	$1.68	$8.21	$2.29	$146.12	$146
70HPS CUT OFF COBRA	119	95	405	48,159	$1.68	$9.04	$2.29	$156.08	$18,573
100HPS POST TOP	1	130	554	554	$2.27	$9.12	$3.13	$174.23	$174
100HPS SPECIAL GRANVILLE	6	130	554	3,323	$2.27	$18.99	$3.13	$292.67	$1,756
100HPS CUT OFF COBRA	26	130	554	14,399	$2.27	$9.12	$3.13	$174.23	$4,530
150HPS CUT OFF COBRA	14	195	831	11,630	$3.41	$10.11	$4.69	$218.56	$3,060
250HPS CUT OFF COBRA	14	300	1,278	17,892	$5.28	$12.98	$7.22	$305.77	$4,281
400HPS FLOOD	13	465	1,981	25,752	$8.15	$13.52	$11.19	$394.35	$5,126
250HPS FLOOD	4	300	1,278	5,112	$5.28	$12.07	$7.22	$294.85	$1,179
400HPS CUT OFF COBRA	7	465	1,981	13,866	$8.15	$15.01	$11.19	$412.23	$2,886
100MERC OPEN SUBURBAN	2	120	511	1,022	$9.67	$8.40	$2.89	$251.50	$503
175MERC ENCLOSED	2	205	873	1,747	$3.60	$9.51	$4.93	$216.53	$433
50HPS ENCLOSED COBRA	193	65	277	53,442	$1.14	$8.04	$1.56	$128.93	$24,884
70HPS ENCLOSED COBRA	268	95	405	108,460	$1.68	$8.32	$2.29	$147.44	$39,514
100HPS ENCLOSED COBRA	45	130	554	24,921	$2.27	$8.74	$3.13	$169.67	$7,635
150HPS ENCLOSED COBRA	25	195	831	20,768	$3.41	$9.14	$4.69	$206.92	$5,173
250HPS ENCLOSED COBRA	16	300	1,278	20,448	$5.28	$11.64	$7.22	$289.69	$4,635
400HPS ENCLOSED COBRA	7	465	1,981	13,866	$8.15	$13.27	$11.19	$391.35	$2,739
OTHER EQUIPMENT (poles/brackets, etc)							monthly	$105.38	$1,265
	835			405,701					$139,184

PROPOSED LED LIGHTING

Models	LED Rated Watts	ANNUAL kWh per fixture	TOTAL ANNUAL KWH	DELIVERY SERVICE ONLY (355 hrs X above rate per kwh; RATE SL Monthly Rate Per Luminaire)	ELECTRIC SUPPLY (355 monthly hrs X fixture rated watts/1000 X above rate per kwh)	ANNUAL Cost Per Fixture	TOTAL ANNUAL COST	FUSEHOLDER KIT & FUSE: Cost per Fixture	FUSEHOLDER KIT & FUSE: TOTAL COST	INSTALLATION SERVICES: Cost per Fixture	INSTALLATION SERVICES: TOTAL COST	EQUIPMENT: Cost per Fixture	EQUIPMENT: TOTAL COST	ALL-IN EQUIPMENT & INSTALLATION	
Affinity S900D-18W-30K-T2-GR	18	77	5,521	$0.32	$0.43	$8.98	$647	$52.00	$3,744.00	$119.44	$8,599.46	$153.00	$11,016.00	$324.44	$23,359.46
Affinity S900D-18W-30K-T2-GR	18	77	77	$0.32	$0.43	$8.98	$9	$52.00	$52.00	$119.44	$119.44	$153.00	$153.00	$324.44	$324.44
Affinity S900D-18W-30K-T2-GR	18	77	9,125	$0.32	$0.43	$8.98	$1,069	$52.00	$6,188.00	$119.44	$14,213.00	$153.00	$18,207.00	$324.44	$38,608.00
Affinity PT6DS-36W-30K	36	153	153	$0.63	$0.87	$17.97	$18	$52.00	$52.00	$119.44	$119.44	$77.00	$77.00	$248.44	$248.44
Affinity PT6DS-36W-30K	36	153	920	$0.63	$0.87	$17.97	$108	$52.00	$312.00	$119.44	$716.62	$77.00	$462.00	$248.44	$1,490.62
Affinity S901D-50W-30K-T2-GR	50	213	5,538	$0.88	$1.20	$24.96	$649	$52.00	$1,352.00	$119.44	$3,105.36	$203.00	$5,278.00	$374.44	$9,735.36
Affinity S901D-50W-30K-T2-GR	50	213	2,982	$0.88	$1.20	$24.96	$349	$52.00	$728.00	$119.44	$1,672.12	$203.00	$2,842.00	$374.44	$5,242.12
Affinity S902D-75W-30K-T2-GR	75	320	4,473	$1.31	$1.81	$37.43	$524	$52.00	$728.00	$119.44	$1,672.12	$221.00	$3,094.00	$392.44	$5,494.12
Affinity P904D-150W-30K-T3-BR-T	150	639	8,307	$2.63	$3.61	$74.87	$973	$52.00	$676.00	$119.44	$1,552.68	$459.00	$5,967.00	$630.44	$8,195.68
Affinity P903D-100W-30K-T3-BR-T	100	426	1,704	$1.75	$2.41	$49.91	$200	$52.00	$208.00	$119.44	$477.75	$299.00	$1,196.00	$470.44	$1,881.75
Affinity S904D-120W-30K-T3-GR	120	511	3,578	$2.10	$2.89	$59.90	$419	$52.00	$364.00	$119.44	$836.06	$368.00	$2,576.00	$539.44	$3,776.06
Affinity S900D-18W-30K-T2-GR	18	77	153	$0.32	$0.43	$8.98	$18	$52.00	$104.00	$119.44	$238.87	$153.00	$306.00	$324.44	$648.87
Affinity S900D-50W-30K-T2-GR	50	213	426	$0.88	$1.20	$24.96	$50	$52.00	$104.00	$119.44	$238.87	$203.00	$406.00	$374.44	$748.87
Affinity S900D-18W-30K-T2-GR	18	77	14,799	$0.32	$0.43	$8.98	$1,734	$52.00	$10,036.00	$119.44	$23,051.33	$153.00	$29,529.00	$324.44	$62,616.33
Affinity S900D-18W-30K-T2-GR	18	77	20,550	$0.32	$0.43	$8.98	$2,408	$52.00	$13,936.00	$119.44	$32,009.10	$153.00	$41,004.00	$324.44	$86,949.10
Affinity S901D-50W-30K-T2-GR	50	213	9,585	$0.88	$1.20	$24.96	$1,123	$52.00	$2,340.00	$119.44	$5,374.66	$203.00	$9,135.00	$374.44	$16,849.66
Affinity S901D-50W-30K-T2-GR	50	213	5,325	$0.88	$1.20	$24.96	$624	$52.00	$1,300.00	$119.44	$2,985.92	$203.00	$5,075.00	$374.44	$9,360.92
Affinity S902D-75W-30K-T2-GR	75	320	5,112	$1.31	$1.81	$37.43	$599	$52.00	$832.00	$119.44	$1,910.99	$221.00	$3,536.00	$392.44	$6,278.99
Affinity S904D-120W-30K-T3-GR	120	511	3,578	$2.10	$2.89	$59.90	$419	$52.00	$364.00	$119.44	$836.06	$356.00	$2,492.00	$527.44	$3,692.06
			101,908				$11,940	avg $52.00	$43,420	avg $119.44	$99,730	avg $170.48	$142,351	avg $341.92	$285,501

ANNUAL ENERGY SAVINGS (kwh)	
	(303,793)
	-74.9%
LONG TERM ENERGY SAVINGS	
5 Years	(1,518,967)
10 Years	(3,037,934)
20 Years	(6,075,868)

ANNUAL OPEX SAVINGS	
	($127,244)
	-91.4%
LONG TERM SAVINGS	
5 Years	($636,220)
10 Years	($1,272,440)
20 Years	($2,544,879)

ANNUAL CO2 EMISSIONS REDUCTION			
	498,440 lbs	249.2	tons
LONG TERM CO2 EMISSIONS REDUCTION			
5 Years	2,492,201 lbs	1,246.1	tons
10 Years	4,984,402 lbs	2,492.2	tons
20 Years	9,968,805 lbs	4,984.4	tons

SHORT TERM CUMULATIVE ROI		
Year 1	($210,453)	-73.7%
Year 2	($83,209)	-29.1%
Year 3	$44,035	15.4%
Year 4	$171,279	60.0%
Year 5	$298,523	104.6%
LONG TERM CUMULATIVE ROI		
Year 10	$934,743	327.4%
Year 20	$2,207,183	773.1%

10 YEAR CAPEX CUMULATIVE IMPACT		
Year 1	$93,474	Profit
Year 2	$186,949	Profit
Year 3	$280,423	Profit
Year 4	$373,897	Profit
Year 5	$467,371	Profit

without NETWORKED LIGHTING CONTROLS		
+	ALL-IN EQUIP & INSTALLATION	$285,501
+	NET BOOK VALUE**	$52,196
=	TOTAL PROJECT COST	$337,697
	ANNUAL OPEX SAVINGS	($127,244)
	SIMPLE PAYOFF Years	2.65
	Months	31.8

** Net Book Value provided by City Of Sanford

SANFORD, ME (CMP) "NETWORKED" LED STREETLIGHT CONVERSION PROPOSAL

Updated: Nov. 6, 2019

Municipality	Account Number	ANNUAL HOURS
Sanford, ME	3501-5349-430	4,260

ELECTRIC SUPPLY*: $0.067800 per kwh — *CONSTELLATION NEW ENERGY SUPPLY COST QUOTED FROM PROVIDED SANFORD CMP BILL*

RATE SL - DELIVERY ONLY SERVICE: $0.049367 per kwh

ELECTRIC SUPPLY*: $0.067800 per kwh

MUNICIPAL STREET LIGHTING SUMMARY

Current Lighting Description	Fixture Qty	CURRENT LIGHTING: Existing Rated Watts	ANNUAL kWh per fixture	TOTAL ANNUAL KWH	DELIVERY CHARGES: Current Delivery Service (RATE SL Monthly Rate Per Luminaire)	Lighting Equipment (RATE SL Monthly Rate Per Luminaire)	ELECTRIC SUPPLY (355 monthly hrs X fixture rated watts/1000 X electric rate per kwh)	ANNUAL Cost Per Fixture	TOTAL ANNUAL COST
	835								
50HPS CUT OFF COBRA	72	65	277	19,937	$1.14	$9.67	$1.56	$148.49	$10,692
70HPS OPEN SUBURBAN	1	95	405	405	$1.68	$8.21	$2.29	$146.12	$146
70HPS CUT OFF COBRA	119	95	405	48,159	$1.68	$9.04	$2.29	$156.08	$18,573
100HPS POST TOP	1	130	554	554	$2.27	$9.12	$3.13	$174.23	$174
100HPS SPECIAL GRANVILLE	6	130	554	3,323	$2.27	$18.99	$3.13	$292.67	$1,756
100HPS CUT OFF COBRA	26	130	554	14,399	$2.27	$9.12	$3.13	$174.23	$4,530
150HPS CUT OFF COBRA	14	195	831	11,630	$3.41	$10.11	$4.69	$218.56	$3,060
250HPS CUT OFF COBRA	14	300	1,278	17,892	$5.28	$12.98	$7.22	$305.77	$4,281
400HPS FLOOD	13	465	1,981	25,752	$8.15	$13.52	$11.19	$394.35	$5,126
250HPS FLOOD	4	300	1,278	5,112	$5.28	$12.07	$7.22	$294.85	$1,179
400HPS CUT OFF COBRA	7	465	1,981	13,866	$8.15	$15.01	$11.19	$412.23	$2,886
100MERC OPEN SUBURBAN	2	120	511	1,022	$9.67	$8.40	$2.89	$251.50	$503
175MERC ENCLOSED	2	205	873	1,747	$3.60	$9.51	$4.93	$216.53	$433
50HPS ENCLOSED COBRA	193	65	277	53,442	$1.14	$8.04	$1.56	$128.93	$24,884
70HPS ENCLOSED COBRA	268	95	405	108,460	$1.68	$8.32	$2.29	$147.44	$39,514
100HPS ENCLOSED COBRA	45	130	554	24,921	$2.27	$8.74	$3.13	$169.67	$7,635
150HPS ENCLOSED COBRA	25	195	831	20,768	$3.41	$9.14	$4.69	$206.92	$5,173
250HPS ENCLOSED COBRA	16	300	1,278	20,448	$5.28	$11.64	$7.22	$289.69	$4,635
400HPS ENCLOSED COBRA	7	465	1,981	13,866	$8.15	$13.27	$11.19	$391.35	$2,739
OTHER EQUIPMENT (poles/brackets, etc)							monthly	$105.38	$1,265
	835			405,701					$139,184

PROPOSED LED LIGHTING

Models	LED Rated Watts	ANNUAL kWh per fixture	TOTAL ANNUAL KWH	DELIVERY SERVICE ONLY (355 hrs X above rate per kwh; RATE SL Monthly Rate Per Luminaire)	ELECTRIC SUPPLY (355 monthly hrs X fixture rated watts/1000 X above rate per kwh)	ANNUAL Cost Per Fixture	TOTAL ANNUAL COST	FUSEHOLDER KIT & FUSE: Cost per Fixture	FUSEHOLDER KIT & FUSE: TOTAL COST	NETWORKED LIGHTING CONTROLS: Cost per Fixture	NETWORKED LIGHTING CONTROLS: TOTAL COST	INSTALLATION SERVICES: Cost per Fixture	INSTALLATION SERVICES: TOTAL COST	EQUIPMENT: Cost per Fixture	EQUIPMENT: TOTAL COST	ALL-IN EQUIPMENT & INSTALLATION	
Affinity S900D-18W-30K-T2-G	18	77	5,521	$0.32	$0.43	$8.98	$647	$52.00	$3,744.00	$118.86	$8,557.89	$119.44	$8,599.46	$153.00	$11,016.00	$443.30	$31,917.35
Affinity S900D-18W-30K-T2-G	18	77	77	$0.32	$0.43	$8.98	$9	$52.00	$52.00	$118.86	$118.86	$119.44	$119.44	$153.00	$153.00	$443.30	$443.30
Affinity S900D-18W-30K-T2-G	18	77	9,125	$0.32	$0.43	$8.98	$1,069	$52.00	$6,188.00	$118.86	$14,144.29	$119.44	$14,213.00	$153.00	$18,207.00	$443.30	$52,752.29
Affinity PT6DS-36W-30K	36	153	153	$0.63	$0.87	$17.97	$18	$52.00	$52.00	$0.00	$0.00	$119.44	$119.44	$77.00	$77.00	$248.44	$248.44
Affinity PT6DS-36W-30K	36	153	920	$0.63	$0.87	$17.97	$108	$52.00	$312.00	$0.00	$0.00	$119.44	$716.62	$77.00	$462.00	$248.44	$1,490.62
Affinity S901D-50W-30K-T2-G	50	213	5,538	$0.88	$1.20	$24.96	$649	$52.00	$1,352.00	$118.86	$3,090.35	$119.44	$3,105.36	$203.00	$5,278.00	$493.30	$12,825.71
Affinity S901D-50W-30K-T2-G	50	213	2,982	$0.88	$1.20	$24.96	$349	$52.00	$728.00	$118.86	$1,664.03	$119.44	$1,672.12	$203.00	$2,842.00	$493.30	$6,906.15
Affinity S902D-75W-30K-T2-G	75	320	4,473	$1.31	$1.81	$37.43	$524	$52.00	$728.00	$118.86	$1,664.03	$119.44	$1,672.12	$221.00	$3,094.00	$511.30	$7,158.15
Affinity P904D-150W-30K-T3-I	150	639	8,307	$2.63	$3.61	$74.87	$973	$52.00	$676.00	$118.86	$1,545.17	$119.44	$1,552.68	$459.00	$5,967.00	$749.30	$9,740.85
Affinity P903D-100W-30K-T3-I	100	426	1,704	$1.75	$2.41	$49.91	$200	$52.00	$208.00	$118.86	$475.44	$119.44	$477.75	$299.00	$1,196.00	$589.30	$2,357.19
Affinity S904D-120W-30K-T3-(	120	511	3,578	$2.10	$2.89	$59.90	$419	$52.00	$364.00	$118.86	$832.02	$119.44	$836.06	$368.00	$2,576.00	$658.30	$4,608.08
Affinity S900D-18W-30K-T2-G	18	77	153	$0.32	$0.43	$8.98	$18	$52.00	$104.00	$118.86	$237.72	$119.44	$238.87	$153.00	$306.00	$443.30	$886.59
Affinity S900D-50W-30K-T2-G	50	213	426	$0.88	$1.20	$24.96	$50	$52.00	$104.00	$118.86	$237.72	$119.44	$238.87	$203.00	$406.00	$493.30	$986.59
Affinity S900D-18W-30K-T2-G	18	77	14,799	$0.32	$0.43	$8.98	$1,734	$52.00	$10,036.00	$118.86	$22,939.90	$119.44	$23,051.33	$153.00	$29,529.00	$443.30	$85,556.23
Affinity S900D-18W-30K-T2-G	18	77	20,550	$0.32	$0.43	$8.98	$2,408	$52.00	$13,936.00	$118.86	$31,854.37	$119.44	$32,009.10	$153.00	$41,004.00	$443.30	$118,803.47
Affinity S901D-50W-30K-T2-G	50	213	9,585	$0.88	$1.20	$24.96	$1,123	$52.00	$2,340.00	$118.86	$5,348.68	$119.44	$5,374.66	$203.00	$9,135.00	$493.30	$22,198.34
Affinity S901D-50W-30K-T2-G	50	213	5,325	$0.88	$1.20	$24.96	$624	$52.00	$1,300.00	$118.86	$2,971.49	$119.44	$2,985.92	$203.00	$5,075.00	$493.30	$12,332.41
Affinity S902D-75W-30K-T2-G	75	320	5,112	$1.31	$1.81	$37.43	$599	$52.00	$832.00	$118.86	$1,901.75	$119.44	$1,910.99	$221.00	$3,536.00	$511.30	$8,180.74
Affinity S904D-120W-30K-T3-(	120	511	3,578	$2.10	$2.89	$59.90	$419	$52.00	$364.00	$118.86	$832.02	$119.44	$836.06	$356.00	$2,492.00	$646.30	$4,524.08
			101,908				$11,940	avg $52.00	$43,420	avg $118.86	$98,416	avg $119.44	$99,730	avg $170.48	$142,351	avg $459.78	$383,917

ANNUAL ENERGY SAVINGS (kwh)	
	(303,793)
	-74.9%
LONG TERM ENERGY SAVINGS	
5 Years	(1,518,967)
10 Years	(3,037,934)
20 Years	(6,075,868)

ANNUAL OPEX SAVINGS	
	($127,244)
	-91.4%
LONG TERM SAVINGS	
5 Years	($636,220)
10 Years	($1,272,440)
20 Years	($2,544,879)

ANNUAL CO2 EMISSIONS REDUCTION				
	498,440	lbs	249.2	tons
LONG TERM CO2 EMISSIONS REDUCTION				
5 Years	2,492,201	lbs	1,246.1	tons
10 Years	4,984,402	lbs	2,492.2	tons
20 Years	9,968,805	lbs	4,984.4	tons

SHORT TERM CUMULATIVE ROI		
Year 1	($308,868)	-80.5%
Year 2	($181,624)	-47.3%
Year 3	($54,380)	-14.2%
Year 4	$72,864	19.0%
Year 5	$200,107	52.1%
LONG TERM CUMULATIVE ROI		
Year 10	$836,327	217.8%
Year 20	$2,108,767	549.3%

10 YEAR CAPEX CUMULATIVE IMPACT		
Year 1	$83,633	Profit
Year 2	$167,265	Profit
Year 3	$250,898	Profit
Year 4	$334,531	Profit
Year 5	$418,164	Profit

with NETWORKED LIGHTING CONTROLS		
+ ALL-IN EQUIP & INSTALLATION		$383,917
+ NET BOOK VALUE		$52,196
= TOTAL PROJECT COST		$436,112
ANNUAL OPEX SAVINGS		($127,244)
SIMPLE PAYOFF	Years	3.43
	Months	41.1

** Net Book Value provided by City Of Sanford

Municipal Leasing Consultants

T: 802.372.8435 F: 802.372.4775
powerofleasing.com
powerofenergyfinancing.com

November 5, 2019

Ronni Lynn Champlin
Finance Director
City of Sanford
919 Main Street
Sanford, ME 04073

Dear Ronni,

Municipal Leasing Consultants, an independent woman-owned business, is pleased to present the following proposal to lease certain capital equipment pursuant to the following terms and conditions:

LESSOR:	Municipal Leasing Consultants, its Agents or Assignee
LESSEE:	City of Sanford, ME
EQUIPMENT:	LED Street Lighting Conversion
EQUIPMENT COST:	Option 1: $337,697.00 – Lighting Conversion Option 2: $436,112.00 – Lighting Conversion with Network Controls
PAYMENT STRUCTURES:	**Option 1: Tax-Exempt Lease Purchase** **Five (5) Years – Annual/ Arrears** Five (5) Annual Payments of $73,086.25 First payment of $73,086.25 due One Year After Acceptance and Annual thereafter (i.e.$337,697.00 x.216426 =$73,086.25)
RATE:	**2.69%**
	Option 1: Tax-Exempt Lease Purchase **Seven (7) Years – Annual/ Arrears** Seven (7) Annual Payments of $53,774.34 First payment of $53,774.34 due One Year After Acceptance and Annual thereafter (i.e.$337,697.00 x.159238=$53,774.34)
RATE:	**2.79%**
	Option 2: Tax-Exempt Lease Purchase **Five (5) Years – Annual/ Arrears** Five (5) Annual Payments of $94,385.77 First payment of $ due One Year After Acceptance and Annual thereafter (i.e.$436,112.00 x.216426=$94,385.77)
RATE:	**2.69%**

Option 2: Tax-Exempt Lease Purchase
Seven (7) Years – Annual/ Arrears
Seven (7) Annual Payments of $69,445.79
First payment of $69,445.79 due One Year After Acceptance and Annual thereafter
(i.e.$436,112.00 x.159241=$69,446.79)

RATE: **2.79%**

Please Circle the Desired Option

As part of the proposal process, we encourage you to contact us to discuss the intricacies of our proposal and your specific goals. There are many variations available to our proposed financing structure, which can be "fine tuned" as our dialog progresses.

The preceding costs are estimates and thus, the payment amount would be changed in proportion to the actual cost. The Vendor(s) will be paid upon the Lessee's authorization and the execution of mutually acceptable documentation.

THE ABOVE QUOTES ARE FIXED FROM **NOVEMBER 5, 2019 TO DECEMBER 5, 2019** IN ANTICIPATION OF **CLOSING / FUNDING** BY THIS DATE**.** THEREAFTER, THE RATE WILL FLOAT AND NOT BE LOCKED IN UNTIL DOCUMENTS ARE PREPARED FOR CLOSING AND WILL BE BASED ON THE LIKE TERM SWAP RATES.

EQUIPMENT ACCEPTANCE DATE:
This proposal is based on both the assumption and the condition that any and all equipment will be delivered to and accepted by Lessee prior to November 5, 2020.

OPTION AT LEASE EXPIRATION:
At the lease expiration, the Lessee shall have the right to purchase the equipment for One dollar ($1.00), assuming the lease is not in default and all terms and conditions of the lease have been met.

NET LEASE:
This lease will be a net lease transaction with maintenance, acceptable insurance coverage, taxes and any legal fees the responsibility of the Lessee.

LEASE AMORTIZATION SCHEDULE:
Amortization schedules with separate principal and interest cost breakdown will be provided with the final documentation.

WARRANTIES:
Lessor is bidding only as to the provision of lease purchase financing for the purchase cost of the equipment and will have no responsibility to the Lessee or any other person for the selection, furnishing, delivery, servicing or maintaining of the equipment. All equipment manufacturer or vendor warranties will be passed to the Lessee under the agreement.

NON-APPROPRIATION:
The lease payments shall be subject to annual appropriation for each fiscal year.

BANK OR NON-BANK QUALIFICATION:
Lessee reasonably anticipates the total amount of tax-exempt obligations (other than private activity bonds) to be issued by Lessee during calendar year 2019, will not exceed ten million ($10,000,000.00) dollars.

FINANCIAL STATEMENTS:
If applicable, Lessee shall furnish Lessor with its financial statement for the last three (3) fiscal years and its current year fiscal budget.

AUTHORIZED SIGNORS:
The Lessee's governing board shall provide MLC with its resolution or ordinance authorizing this Agreement and shall designate the individual(s) to execute all necessary documents used therein.

LEGAL OPINION:
The Lessee's counsel shall furnish MLC with an opinion of counsel letter covering this transaction and the documents used herein.

REIMBURSEMENT:
If Lessee intends to be reimbursed for any equipment cost associated with this agreement, intent for reimbursement from the proceeds of this Agreement must be evidenced, and must qualify under the Treasury Regulation Section 1.150.2.

DOCUMENTATION:
All documentation will be provided by Lessor, its Agents or Assignee, and must be satisfactory to all parties concerned.

ESCROW FUNDING:

- *If applicable*, an interest-bearing escrow account will be established to make disbursements. The proceeds of the lease will be deposited into an Escrow Account at a fee of $500.00.

We will need the following prior to disbursements from escrow:

1. Payment Request and Acceptance Certificate signed by authorized signer
2. Vendor Invoice with payment instructions (wire or check)
3. W-9 for Vendor
4. Energy Project – Payment and Performance Bonds and an original Dual Obligee Rider listing the bank, signed by all parties
5. Insurance Certificate – Listing the applicable property and liability coverage and listing the lease number, equipment and any serial numbers.

PREPAYMENT OPTION:
The Lessee will have the option to prepay on any payment date for 102% of the remaining balance.

BASIS OF PROPOSAL:
This proposal is based upon financing being provided by Lessor and should not be construed nor relied upon as a commitment. Such a commitment is subject to formal credit review, approval and execution of mutually acceptable documentation. The contract, and not the proposal, will set forth the agreement between the parties.

We appreciate the opportunity to provide this proposal and look forward to working with you in the future. If the foregoing meets with the City's approval, please date and sign the acceptance below and return the signed proposal to the undersigned via email or fax to 802-372-4775 and subsequently remit payment of $695.00 for the Documentation Fee. Failure to consummate the transaction after credit approval will result in a $695.00 cancellation fee. Formal credit approval will be pursued upon receipt of the signed proposal and complete credit package. **Credit approval normally takes ten (10) to fourteen (14) business days.**

If you have any questions or need further information, please do not hesitate to contact me at 802-372-8435.

The foregoing is acknowledged and accepted as of the _____ day of _____, 2019.

City of Sanford, Maine

By: _____

Title: _____

Sincerely,
Reneé Piche

Reneé M. Piché
President

Option 1 - 5 years

Compound Period: Annual

Nominal Annual Rate: 2.690 %

CASH FLOW DATA

	Event	Date	Amount	Number	Period	End Date
1	Loan	12/05/2019	337,697.00	1		
2	Payment	12/05/2020	73,086.25	5	Annual	12/05/2024

AMORTIZATION SCHEDULE - Normal Amortization

	Date	Payment	Interest	Principal	Balance
Loan	12/05/2019				337,697.00
2019 Totals		0.00	0.00	0.00	
1	12/05/2020	73,086.25	9,084.05	64,002.20	273,694.80
2020 Totals		73,086.25	9,084.05	64,002.20	
2	12/05/2021	73,086.25	7,362.39	65,723.86	207,970.94
2021 Totals		73,086.25	7,362.39	65,723.86	
3	12/05/2022	73,086.25	5,594.42	67,491.83	140,479.11
2022 Totals		73,086.25	5,594.42	67,491.83	
4	12/05/2023	73,086.25	3,778.89	69,307.36	71,171.75

2023 Totals		73,086.25	3,778.89	69,307.36	
5	12/05/2024	73,086.25	1,914.50	71,171.75	0.00
2024 Totals		73,086.25	1,914.50	71,171.75	
Grand Totals		365,431.25	27,734.25	337,697.00	

Last interest amount decreased by 0.02 due to rounding.

Option 1 - 7 years

Compound Period: Annual

Nominal Annual Rate: 2.790 %

CASH FLOW DATA

	Event	Date	Amount	Number	Period	End Date
1	Loan	12/05/2019	337,697.00	1		
2	Payment	12/05/2020	53,774.34	7	Annual	12/05/2026

AMORTIZATION SCHEDULE - Normal Amortization

	Date	Payment	Interest	Principal	Balance
Loan	12/05/2019				337,697.00
2019 Totals		0.00	0.00	0.00	
1	12/05/2020	53,774.34	9,421.75	44,352.59	293,344.41
2020 Totals		53,774.34	9,421.75	44,352.59	
2	12/05/2021	53,774.34	8,184.31	45,590.03	247,754.38
2021 Totals		53,774.34	8,184.31	45,590.03	
3	12/05/2022	53,774.34	6,912.35	46,861.99	200,892.39
2022 Totals		53,774.34	6,912.35	46,861.99	
4	12/05/2023	53,774.34	5,604.90	48,169.44	152,722.95

2023 Totals		53,774.34	5,604.90	48,169.44	
5	12/05/2024	53,774.34	4,260.97	49,513.37	103,209.58
2024 Totals		53,774.34	4,260.97	49,513.37	
6	12/05/2025	53,774.34	2,879.55	50,894.79	52,314.79
2025 Totals		53,774.34	2,879.55	50,894.79	
7	12/05/2026	53,774.34	1,459.55	52,314.79	0.00
2026 Totals		53,774.34	1,459.55	52,314.79	
Grand Totals		376,420.38	38,723.38	337,697.00	

Last interest amount decreased by 0.03 due to rounding.

Option 2 - 5 years

Compound Period: Annual

Nominal Annual Rate: 2.690 %

CASH FLOW DATA

	Event	Date	Amount	Number	Period	End Date
1	Loan	12/05/2019	436,112.00	1		
2	Payment	12/05/2020	94,385.77	5	Annual	12/05/2024

AMORTIZATION SCHEDULE - Normal Amortization

	Date	Payment	Interest	Principal	Balance
Loan	12/05/2019				436,112.00
2019 Totals		0.00	0.00	0.00	
1	12/05/2020	94,385.77	11,731.41	82,654.36	353,457.64
2020 Totals		94,385.77	11,731.41	82,654.36	
2	12/05/2021	94,385.77	9,508.01	84,877.76	268,579.88
2021 Totals		94,385.77	9,508.01	84,877.76	
3	12/05/2022	94,385.77	7,224.80	87,160.97	181,418.91
2022 Totals		94,385.77	7,224.80	87,160.97	
4	12/05/2023	94,385.77	4,880.17	89,505.60	91,913.31

2023 Totals		94,385.77	4,880.17	89,505.60	
5	12/05/2024	94,385.77	2,472.46	91,913.31	0.00
2024 Totals		94,385.77	2,472.46	91,913.31	
Grand Totals		471,928.85	35,816.85	436,112.00	

Last interest amount decreased by 0.01 due to rounding.

Option 2 - 7 years

Compound Period: Annual

Nominal Annual Rate: 2.790 %

CASH FLOW DATA

	Event	Date	Amount	Number	Period	End Date
1	Loan	12/05/2019	436,112.00	1		
2	Payment	12/05/2020	69,445.79	7	Annual	12/05/2026

AMORTIZATION SCHEDULE - Normal Amortization

	Date	Payment	Interest	Principal	Balance
Loan	12/05/2019				436,112.00
2019 Totals		0.00	0.00	0.00	
1	12/05/2020	69,445.79	12,167.52	57,278.27	378,833.73
2020 Totals		69,445.79	12,167.52	57,278.27	
2	12/05/2021	69,445.79	10,569.46	58,876.33	319,957.40
2021 Totals		69,445.79	10,569.46	58,876.33	
3	12/05/2022	69,445.79	8,926.81	60,518.98	259,438.42
2022 Totals		69,445.79	8,926.81	60,518.98	
4	12/05/2023	69,445.79	7,238.33	62,207.46	197,230.96

2023 Totals		69,445.79	7,238.33	62,207.46	
5	12/05/2024	69,445.79	5,502.74	63,943.05	133,287.91
2024 Totals		69,445.79	5,502.74	63,943.05	
6	12/05/2025	69,445.79	3,718.73	65,727.06	67,560.85
2025 Totals		69,445.79	3,718.73	65,727.06	
7	12/05/2026	69,445.79	1,884.94	67,560.85	0.00
2026 Totals		69,445.79	1,884.94	67,560.85	
Grand Totals		486,120.53	50,008.53	436,112.00	

Last interest amount decreased by 0.01 due to rounding.

affinity led lighting

Sanford Maine

Affinity LED Lighting - City of Sanford ME TIMELINE - +/- 835 CMP Co. owned lights

Milestone	1	2	3	4	5	6	7	8	9	10
	11/6/19	12/4/19	12/18/19	1/1/20	1/15/20	1/29/20	2/19/20	3/18/20	4/27/20	5/11/20
	Bid Submission	Bid Awarded	Contract Signed	GIS Audit Commences	GIS Audit Complete	GIS Audit Findings Review	Installation Plan Sign-off	Materials Delivery	Installation Completes	follow-up Punch List
			Project Team Kick Off	Design Data Points Identified	Initial City Wide Design Plan	Final Design Plan Sign-off	Materials Allocated & Assembled	Installation Begins	Recycling Scheduled	Utility Closing
				CMP Co City & Affinity Meetings	Installation Plan Outlined	Product Selection Finalized				

This conceptual schedule is representative of our project time-lines and capabilities.
Upon selection, Affinity LED will work with the City of Sanford to firm up all time lines, aligning milestones and objectives to ensure a successful implementation.

Affinity LED Light
Key Project Personnel

Steve Lieber

President and Principal

Mobile: 603-828-8919

steve@affinityledlight.com

John Branagan

Director - Lead Project Manager

Mobile: 603-475-1564

jb@affinityledlight.com

Additional Staff Assigned –

Caroline Kinville	**Director - Finance & Production Operations**
Sandra Massie	**Accounting Manager**
Angel Fu	**Product & Materials Procurement Manager**
Andrew Tiebout	**Products & Technology Manager**
Michael Snay	**Lead Technician & Production Manager**
Gerald Easson	**Lead Assembly Technician**

Steve Lieber, the founder of Affinity LED Lighting, has a strong foundation in global supply chain, product creation and project implementation. He began the company in 2012.

John Branagan has been with Affinity LED Lighting since 2014 and has been instrumental in the company's growth. He has been the lead project manager on all of our Municipal Street-lighting projects.

Caroline Kinville joined Affinity LED Lighting in 2016. She was formerly the Plant Controller and HR Manager at GM Nameplate Inc., a manufacturer formerly located in Dover, NH. She brings strong operations and financial management to the table and has played a key role in the implementation of our domestic assembly operations.

Sandra Massie joined in September 2017 coming from SIG SAUER located in Portsmouth, NH where she was part of the team managing international vendors and logistics. She also brings a broad set of skills well suited to our growing company.

Angel Fu joined the company in 2014, and played an instrumental part of the planning and implementation of our local assembly operations. She is responsible for the majority of our assembly materials and product procurement. She recently received her MBA from SNHU.

Andrew Tiebout joined the team in 2017 and recently completed his MBA at SNHU. As our product development and technology manager, he provides support across the company and leads many special projects.

Michael Snay is a US Veteran who learned his electrical trade as a sonar technician in the US Navy. He has a strong background in ESD procedures, electronics production and repair, and is a critical thinker.

Gerald Easson is a former US Marine with an impressive resume of electronic wiring and assembly. He has also worked in manufacturing at Vutek in Meredith, NH.

Affinity LED

Testimonials similar turnkey projects

Augusta, ME

"The City of Augusta awarded a contract to Affinity LED Lighting in late 2018 for the conversion and replacement of approximately 2,300 roadway, ornamental, and parking lot lighting throughout the city. As part of the project the city chose to complete a citywide audit of all light fixtures. The audit will provide the city with an accurate count of all lighting fixtures and will greatly assist us in maintaining the completed lighting system.

The City of Augusta selection team was invited by Affinity, namely Steve Lieber and John "JB" Branagan, to travel to Dover, N.H to meet with them. They provided us with a tour of their factory, an inspection/review of their light fixtures, a review of the proposed control system, and to view their lights in operation. Their process for assembly, the light fixtures, the control system, and their approach to the project reassured the city that we had indeed chose the right company to complete our project.

Steve and JB have both been excellent in communication regarding the process for the audit, material delivery, invoicing, installation coordination, and providing all the necessary control system training. They both provide the customer with the confidence of knowing that they are fully invested into the success of the project. It is a pleasure to work with a company that takes all the time necessary to make you feel comfortable with the entire process from start to finish.

I would highly recommend Affinity LED Lighting to anyone that may be considering a project. They are an excellent company to work with. "

Bob LaBreck
Facilities Manager
City of Augusta
16 Cony Street
Augusta, Maine 04330
Office: 207-626-2365
Cell: 207-242-6773
Email: bob.labreck@augustamaine.gov

Claremont, NH

"Claremont has worked with Affinity for all of our street lighting needs since March of 2016. The service has been fantastic. They have corrected our light ledger and is now accurate for the first time in 10 years. They projected a 46% savings in electricity and have delivered exactly that. We have added all of our metered outside lights to be retro fit to LED and are seeing over 60% savings. Their product has reduced light pollution so we can see stars from inside the city again. We have changed over 1100 street lights now with very little disruption or customer complaints. We see a real great improvement in driving through fog and snow with the 4000k lights. Much easier for older drivers. Affinity made this project go smoothly and successfully."

Vic St. Pierre
City of Claremont
Director of Public Works
8 Grandview Street
Claremont, NH 03743
Office: 603 504-0353
Cell: 603 543-7927
Email: vstpierre@claremontnh.com

Rochester, NH and Dover, NH

"I am very happy to provide a reference as I've had the pleasure of working with Affinity in two cities. I was formerly the Director of City Services in Rochester, NH and we worked with Affinity to change out nearly 1,500 streetlights. Now that I am in Dover we are wrapping up the conversion of about 1,800 streetlights to LED's. I've also worked with Affinity to retrofit some of our municipal buildings to LED lights, both in Rochester and in Dover.

They have been an absolute pleasure to work with. They were exceedingly helpful every step of the way. Initially they took time to explain the LED technology, their manufacturing process, some of the American Medical Association recommendations for lighting temperatures, they walked us through available grant opportunities, even submitting the grant requests. Their guidance and leadership were excellent.

Inevitably there are always going to be a few issues that need to be addressed along the way – either improper wiring, or possibly lighting fixtures that don't show up on the billing ledger. If anything ever came up they were quick to jump on it and worked to find a solution. I remember one occasion being on the phone with them at 10:30 PM at night to address a lighting issue and they literally jumped right on it and worked til it was resolved. While I was in Rochester they actually worked with us to install some demonstration LED's in our Eversource cobrahead lights and also our downtown ornamental lights. They were extremely cooperative in working with us to get the lights installed and understood our need to put a few on display, such that the community could observe and provide comments.

They have also been very generous here in Dover. They provided free LED lights to get our City Hall clock tower illuminated, and in an amazing show of generosity, actually installed new LED's on the Scammell Bridge between Dover and Durham at no cost, and they are picking up the electricity costs."

John Storer
Director of Community Services
City of Dover, NH
271 Mast Rd.
Dover, NH 03820-4169
Office: 603-516-6450
Email: j.storer@dover.nh.gov

Portsmouth, NH

"Affinity LED was competitively selected to convert all of the cobra head streetlights for the City of Portsmouth because we felt their product produced a superior light quality. The environmental benefits of reduced electricity consumption from an LED streetlight conversion are well established, yet Affinity LED's product goes a step further on the path to sustainability. The fact that the lights are assembled locally in Dover NH and the significant waste reduction from their unique packaging techniques were icing on the cake for this sustainability oriented project."

Jacob A. Levenson
Solid Waste Sustainability Coordinator
Department of Public Works
City of Portsmouth
680 Peverly Hill Road
Portsmouth, NH 03801
Office: 603-766-1412
Email: jalevenson@cityofportsmouth.com

affinity led lighting

SIMILAR PROJECTS – CLIENT REFERENCES

CITY OF AUGUSTA, MAINE – Competitive Award

Client Contact Information:	Contact Address:
Raphael E. St Pierre - Assistant City Manager ralph.stpierre@augustamaine.gov 207-626-2300	16 Cony St. Augusta, ME 04330

TOWN OF BERWICK, MAINE

Client Contact Information:	Contact Address:
Stephen G. Eldridge, MPA Town Manager townmanager@berwickmaine.org 207-698-1101 x 111	11 Sullivan Street Berwick, Maine 03901

TOWN OF CHELSEA, MAINE

Client Contact Information:	Contact Address:
Scott Tilton – Town Manager chelseamanager@chelseamaine.org 207-582-4802	560 Togus Road Chelsea, ME 04330

TOWN OF ELIOT, MAINE – Competitive Award

Client Contact Information:	Contact Address:
Dana Lee – Town Manager townmanager@eliotme.org 207-439-1813	1333 State Road Eliot, ME 03903

TOWN OF FAIRFILED, MAINE

Client Contact Information:	Contact Address:
Michelle M. Flewelling– Town Manager mflewelling@fairfieldme.com 207-453-7911 ext.101	PO Box 149 Fairfield, ME 04937

TOWN OF FARMINGDALE, MAINE

Client Contact Information:	Contact Address:
Rose Webster - Town Clerk/Tax Collector/Treas. Admin. Assistant to the Selectboard farmingdaleclerk@roadrunner.com	289 Maine Avenue Farmingdale, ME 04344

CITY OF GARDINER, MAINE

Client Contact Information:	Contact Address:
Christine M. Landes, MBA/CMM – Town Manager clandes@gardinermaine.com 207-582-4200	City of Gardiner 6 Church Street Gardiner, Me. 04345

affinity led lighting

SIMILAR PROJECTS – CLIENT REFERENCES

CITY OF HALLOWELL, MAINE

Client Contact Information:	Contact Address:
Nate Rudy – Town Manager nrudy@hallowellmaine.org 207-623-4021 Ext. 203	City of Hallowell 1 Winthrop Street Hallowell, Me. 04347

TOWN OF KITTERY, MAINE – Competitive Award

Client Contact Information:	Contact Address:
Kendra Amaral – Town Manager KAmaral@kitteryme.org Chief David O'Brien - DO'Brien@kitteryme.org 207-439-1813	200 rogers Road Kittery, ME 03903

TOWN OF MONSON, MAINE – Competitive Award

Client Contact Information:	Contact Address:
Daniel Swain - City Manager monsontownmgr@myfairpoint.net 207-997-3641	10 Tenney Hill Rd. Monson, ME 04464

TOWN OF NORTH BERWICK, MAINE

Client Contact Information:	Contact Address:
Dwayne Morin - Town Manager dmorin@townofnorthberwick.org 207-676-3112 x 4	21 Main Street North Berwick, Maine 03906

TOWN OF RANDOLPH, MAINE

Client Contact Information:	Contact Address:
Peter Coughlin petertown99@gmail.com 207-592-1790	121 Kinderhook St Randolph, ME 04346

TOWN OF TREMONT, MAINE

Client Contact Information:	Contact Address:
Christopher Saunders – Town Manager manager@tremont.maine.gov 207-244-7204	20 Harbor Drive Bass Harbor, ME 04653

CITY OF WATERVILLE, MAINE – Competitive Award

Client Contact Information:	Contact Address:
Michael Roy - City Manager mroy@waterville-me.gov 207-680-4204	1 Common St. Waterville, ME 04901

affinity led lighting

SIMILAR PROJECTS – CLIENT REFERENCES

TOWN OF WINSLOW, MAINE

Client Contact Information:	Contact Address:
Michael W. Heavener– Town Manager mheavener@winslow-me.gov 207-872-2776 x5210	114 Benton Avenue Winslow, ME 04901

NEW HAMPSHIRE DEPARTMENT OF TRANSPORTATION – Competitive Award

Client Contact Information:	Contact Address:
David Rodrigue Director of Operations Email: Dave.Rodrigue@dot.nh.gov Phone: (603) 485-3806	7 Hazen Drive Concord, NH 03302

TOWN OF ANTRIM, NEW HAMPSHIRE

Client Contact Information:	Contact Address:
Donna Hanson Town Administrator Email: antrimbiz@tds.net Phone: 603-588-6785 ext 221	Town Hall 66 Main Street Antrim, NH 03440

TOWN OF BEDFORD, NEW HAMPSHIRE – Competitive Award

Client Contact Information:	Contact Address:
Jeanne Walker Town Engineer/Asst. Director of Public Works 24 North Amherst Road Email: jwalker@bedfordnh.org Phone: (603) 472-3070	Town Offices 24 North Amherst Road Bedford, NH 03110

CITY OF BERLIN, NEW HAMPSHIRE – Competitive Award

Client Contact Information:	Contact Address:
Jim Wheeler – City Manager jwheeler@berlinnh.gov 603-752-7532	City of Berlin - City Hall 168 Main Street Berlin, NH 03570

TOWN OF BETHLEHEM, NEW HAMPSHIRE

Client Contact Information:	Contact Address:
April Hibberd admin@bethlehemnh.org	Town of Bethlehem PO Box 189 2155 Main St. Bethlehem, NH 03574

TOWN OF BROOKLIN, NEW HAMPSHIRE

Client Contact Information:	Contact Address:
Tad Putney - Town Manager tputney@brookline.nh.us (603) 673-8855	1 Main St, Brookline, NH 03033

affinity led lighting

SIMILAR PROJECTS – CLIENT REFERENCES

CITY OF CLAREMONT, NEW HAMPSHIRE – Competitive Award

Client Contact Information:	Contact Address:
Victor St. PierrePublic Works Director vstpierre@claremontnh.com Phone: (603) 504-0353 Main (603) 542-7020	Department of Public Works 8 Grandview Street Claremont, NH 03743

TOWN OF CONWAY, NEW HAMPSHIRE – Competitive Award

Client Contact Information:	Contact Address:
Paul DegliAngeli, PE Director of Public Works Email: pauld@conwaynh.org Phone: (603) 447 - 3811 x 24	Town of Conway NH 1634 East Main St. Center Conway, NH 03813

CITY OF DOVER, NEW HAMPSHIRE – Competitive Award

Client Contact Information:	Contact Address:
J. Michael Joyal, City Manager Email: m.joyal@dover.nh.gov Direct: (603) 516-6023	288 Central Avenue Dover, NH 03820

TOWN OF EPPING, NEW HAMPSHIRE

Client Contact Information:	Contact Address:
Greg Dodge Email: administrator@townofepping.com Phone: (603) 679-5441	Town of Epping Attn: Town Administrator 157 Main St. Epping, NH 03042

TOWN OF EXETER, NEW HAMPSHIRE

Client Contact Information:	Contact Address:
Je Jennifer Royce Perry, P.E., Director Exeter Public Works jperry@exeternh.gov (603) 773-6157	Exeter Public Works 13 Newfields Road Exeter, NH 03833

TOWN OF FARMINGTON, NEW HAMPSHIRE

Client Contact Information:	Contact Address:
Arthur Capello Town Administrator Email: farmingtonta@metrocast.net Phone: (603) 755-2208	356 Main Street Farmington, NH 03835

TOWN OF FRANCONIA, NEW HAMPSHIRE – Competitive Award

Client Contact Information:	Contact Address:
Holly Burbank Town Administrator Email: townadmin@franconianh.org Phone: (603) 823-7752	Town of Franconia NH 421 Main Street Franconia, NH 03580

affinity led lighting

SIMILAR PROJECTS – CLIENT REFERENCES

TOWN OF GILFORD, NEW HAMPSHIRE

Client Contact Information:	Contact Address:
Scott J. Dunn, Town Administrator Email: sdunn@gilfordnh.org Phone: (603) 527-4706	Town of Gilford 47 Cherry Valley Road Gilford, NH 03249

TOWN OF GORHAM, NEW HAMPSHIRE

Client Contact Information:	Contact Address:
Denise Vallee Director of Finance & Administration Email: dvallee@gorhamnh.org Phone: (603) 466-3322	Town of Gorham NH 20 Park Street Gorham, NH 03581

TOWN OF GREENLAND, NEW HAMPSHIRE

Client Contact Information:	Contact Address:
Karen Anderson Town Administrator Email: KAnderson@greenland-nh.com Phone: (603) 431-7111	Town of Greenland NH 11 Town Square Greenland, NH 03840

TOWN OF HAMPSTEAD, NEW HAMPSHIRE – Competitive Award

Client Contact Information:	Contact Address:
Sally Theriault Town Administrator Email: sally.theriault@comcast.net Phone: (603) 329-4100 ext. 100	Town of Hampstead NH 11 Main Street Hampstead, NH 03841

TOWN OF HAMPTON, NEW HAMPSHIRE

Client Contact Information:	Contact Address:
John Hubbard jhubbard@northhampton-nh.gov	Town of Hampton NH 11 Airport Hampton, NH

TOWN OF HENNIKER, NEW HAMPSHIRE – Competitive Award

Client Contact Information:	Contact Address:
Christine Trovato – Town Manager	Town of Henniker, NH 18 Depot Hill Rd. Henniker, NH 03242

TOWN OF HOLLIS, NEW HAMPSHIRE – Competitive Award

Client Contact Information:	Contact Address:
Todd J. Croteau, Public Works Director tcroteau@hollisnh.org 603-465-2246	10 Muzzey Rd. Hollis NH, 03049

affinity led lighting

SIMILAR PROJECTS – CLIENT REFERENCES

TOWN OF JAFFREY, NEW HAMPSHIRE – Competitive Award

Client Contact Information:	Contact Address:
Jon Frederick, Town Manager Randall W. Heglin, Director Dep. of Public Works rheglin@townofjaffrey.com 603-532-6521	Town of Jaffrey, NH 23 Knight Street Jaffrey, NH 03452

CITY OF KEENE, NEW HAMPSHIRE – Competitive Award

Client Contact Information:	Contact Address:
Duncan Watson Assistant Public Works Director Email: dwatson@ci.keene.nh.us Phone: (603) 352-6550	City of Keene NH 350 Marlboro Street Keene, NH 03431

TOWN OF LISBON, NEW HAMPSHIRE

Client Contact Information:	Contact Address:
Sharon Penney Lisbon Town Administrator Email: townadmin@lisbonnh.org Phone: 603-838-6376	Town of Lisbon 46 School St. Lisbon, NH 03585

TOWN OF MERRIMACK, NEW HAMPSHIRE – Competitive Award

Client Contact Information:	Contact Address:
Kyle Fox Public Works Director Email: kfox@merrimacknh.gov Phone: (603) 427-5137	Town of Merrimack NH 6 Baboosic Lake Road Merrimack, NH 03054

TOWN OF MILFORD, NEW HAMPSHIRE – Competitive Award

Client Contact Information:	Contact Address:
Mark Bender Town Administrator Email: mbender@milford.nh.gov Phone: (603) 240-0601	Town of Milford NH 1 Union Square Milford, NH 30355

TOWN OF NEW CASTLE, NEW HAMPSHIRE

Client Contact Information:	Contact Address:
William Stewart Select Board Chair Email: bill.stewart@newcastlenh.org New Castle, NH 03854	Town of New Castle NH 49 Main Street New Castle, NH 03854

TOWN OF NEWFIELDS, NEW HAMPSHIRE

Client Contact Information:	Contact Address:
Donna Newman Email: donnanewman@newfieldsnh.gov Phone: (603) 755-2208	Town of Newfields NH 65 Main Street Newfields, NH 03856

affinity led lighting

SIMILAR PROJECTS – CLIENT REFERENCES

TOWN OF NEWINGTON, NEW HAMPSHIRE

Client Contact Information:	Contact Address:
Kevin Kelley Email: kkelley@townofnewingtonnh.com Phone: (603) 426-7640	Town of Newington NH 205 Nimble Hill Rd Newington, NH 03801

TOWN OF NEWMARKET, NEW HAMPSHIRE

Client Contact Information:	Contact Address:
Steve Fournier Town Administrator Email: sfournier@newmarketnh.gov Phone: (603) 659-3617	Town of Newmarket NH 186 Main Street Newmarket, NH 03857

TOWN OF NORTH HAMPTON, NEW HAMPSHIRE

Client Contact Information:	Contact Address:
John Hubbard DPW Director jhubbard@northhampton-nh.gov 603-365-6778	Town of North Hampton NH North Hampton, NH 03857

TOWN OF PETERBOROUGH, NEW HAMPSHIRE

Client Contact Information:	Contact Address:
Seth MacLean Operations Manager, DPW P: 603.924.8000, ex. 102 C: 603.831.8814 www.townofpeterborough.com www.peterboroughprojects.info	Town of Peterborough, NH 1 Grove St. Peterborough NH 03458

TOWN OF PITTSFIELD, NEW HAMPSHIRE – Competitive Award

Client Contact Information:	Contact Address:
Cara Marston Town Administrator Email: cmarston@pittsfieldnh.gov Phone: (603) 435-6773	Town Hall 85 Main Street Pittsfield, NH 03263

CITY OF PORTSMOUTH, NEW HAMPSHIRE – Competitive Award

Client Contact Information:	Contact Address:
Peter Rice Public Works Director Email: phrice@cityofportsmouth.com Phone: (603) 427-1530	Department of Public Works 680 Peverly Hill Rd Portsmouth, NH 03801

affinity led lighting

SIMILAR PROJECTS – CLIENT REFERENCES

TOWN OF RINDGE, NEW HAMPSHIRE – Competitive Award

Client Contact Information:	Contact Address:
Mike Cloutier – Public Works Director Email: rindgepw@town.rindge.nh.us Phone: (603) 899-5181	30 Payson Hill Road Rindge, NH 03461

CITY OF ROCHESTER, NEW HAMPSHIRE

Client Contact Information:	Contact Address:
Michael Riley Municipal Services Supervisor-Facilities Email: michael.riley@rochesternh.net Phone: (603) 332-4096	Rochester NH DPW 45 Old Dover Road Rochester, NH 03867

CITY OF SOMERSWORTH, NEW HAMPSHIRE

Client Contact Information:	Contact Address:
Michael Bobinsky Director of Public Works and Utilities Email: mbobinsky@somersworth.com Phone: (603) 692-4266	1 Government Way Somersworth, NH 03878

TOWN OF STRATHAM, NEW HAMPSHIRE

Client Contact Information:	Contact Address:
David Moore, Town Adminstartor Email: dmoore@StrathamNH.gov Phone: 603 772-7391 x 181	Town of Stratham, NH 10 Bunker Hill Road Stratham, NH 03885

TOWN OF SUGARHILL, NEW HAMPSHIRE

Client Contact Information:	Contact Address:
Margo Connors, Town Manager Email: connorsmargo@gmail.com Phone: 603 823-8575	Margo Connors P.O. Box 862 Franconia, NH 03580

TOWN OF SWANZEY, NEW HAMPSHIRE – Competitive Award

Client Contact Information:	Contact Address:
Michael T. Branley, MPA Town Administrator Email: mbranley@town.swanzey.nh.us Phone: (603) 352-7411 ext. 107	Town of Swanzey NH 620 Old Homestead Highway Swanzey, NH 03446

TOWN OF WHITEFIELD, NEW HAMPSHIRE

Client Contact Information:	Contact Address:
Shawn C. White Public Works Director Email: whitefielddpw@ne.rr.com Phone: (603) 837-2202	Town of Whitefield NH 56 Littleton Road Whitefield, NH 03598

Our Project Approach

Design

Affinity LED believes that all municipal streetlighting conversion projects should start with a 'simple designed retrofit'. This practical approach looks at existing street-light placed during the comprehensive investment grade GIS audit and represented as Affinity "proposed wattages". We then work with the City to make practical real world adjustments.

If a full certified designed is required Affinity partners with NCQLP Certified Independent Lighting Designers to provide an independent analysis of existing street lighting within the City of Sanford, who will use the following GIS-based mapping and street & roadway data to inform the City's design plan and replacement streetlight standard for the new LED lighting conversions. Typical considerations are:

- Street classification, roadway and lane width, presence of medians and sidewalks
- Vehicular, bike and pedestrian activity levels, inclusive of accident or incident data for specific street zones
- Presence of sensitive receptors such as schools, hospitals and elderly housing
  Public gathering sites such as auditoriums, stadiums and theaters
- Input from City personnel such as Traffic Engineers, Bike/Ped Coordinators, Transportation Planners, Police and Fire, and Parks and Recreation
- Current streetlight type, light source, wattage, mounting height and bracket arm length.
- Aerial and street level photographs to identify residential vs commercial zones.
- Zoning maps may also be used to identify lighting classification zones such as unique neighborhoods where lower light levels or shielding may be desired.

Our deliverable will provide the best solution based on site conditions for safety of the residents of the City of Sanford. Our experience also confirms that much of the existing lighting layout may already meet design goals and objectives, allowing us to focus on the major areas where the data indicates attention is required.

While meeting IES standards of RP-8-14 are always the goal of a uniformed lighting design, not all areas will meet the design requirement due to the common occurrence of non-continuous lighting or irregular pole spacing in many areas of the City.

Digital Inventory - See GIS Attachment

Project Management

Affinity LED has a proven track record in New England of being capable and competent in executing multiple full turn-key conversions. Examples of full

Turn-Key conversions over 1,000 lights include Augusta ME , Berlin, Claremont, Dover, Keene, Portsmouth, and Rochester, New Hampshire, as well as the State-wide NHDOT roadway conversion. We regularly work on multiple projects simultaneously in the New England region and our project history shows this.

Technology Procurement

Affinity LED offers only our own brand of DLC listed streetlights that are assembled locally at our UL approved manufacturing facility in Dover, NH with a workforce of U.S. Veterans. We are fortunate to be producing "best-in-class" street lighting that has been vetted and selected against the "industry's best" competitor street lighting products.

We partner with you, the City, to ensure that you get the best products for the best price. All of our municipal partners large or small enjoy the same materials pricing to ensure transparency on all public bids.

a. All fixture selection is based on the "designed retrofit" plan based on the GIS audit, Certified lighting designer inputs, and all considerations of roadway lighting standards.
b. Having installed the only smart street lighting wireless mesh-network in New Hampshire, and completing both Augusta and Gardiner this month, Affinity LED is familiar with all aspects of successfully deploying and managing a "Smart Community" solution. At this time, CMP Co. does not allow for any billing adjustments based on consumption, although we believe that this will be coming and the Maine PUC will follow suit of other states in adopting smart metering standards. At the current time, the benefits to the City are 'off balance sheet' and lay the foundation of a Networked "Smart Community"... The future is now.

AMA Considerations

Affinity LED has been following the AMA and IDSA position on best practices of LED lighting since the article was published. Lead project manager John Branagan sits on the Mt. Agamenticus Steering Committee and is devoted to ensure our 3,000k proposed lighting meets or exceeds the best practices set forth in the AMA position paper. He has also testified before the NH Senate and PUC ensuring others follow with this important guidance. We have you covered!

Installation and Maintenance

Please see our comments below regarding the installation process under the Construction Administration section. A project schedule can be found in the **Conceptual Project Schedule.**

Any requested shielding or fixture adjustments would be addressed in the final stages of the installation "punch list" before the project is completed. Regarding maintenance, all products proposed come with a 10-year warranty and the first (1) year is inclusive of labor. Beyond the warranty provision, given the reliability of our products, with a rated life of over 20 years and the extremely low failure rates of LEDs, our experience shows that most lighting failures after a conversion are related to Utility power infrastructure. By partnering with locally based installers, and having our assembly and repair facility in Dover, Affinity LED is operationally capable of meeting the City's expectations for service and repair above and beyond any standard Operations and Maintenance (O & M) .

Construction Administration

Our approach to managing the construction phase of a turn-key LED conversion is simple… "plan your work, and work your plan". All members of the Affinity LED "team" work together to ensure a safe, accurate and expeditious conversion, from project kick-off, to GIS audit of the City's existing inventory, through the design phase, installation, and even through the recycling of legacy lighting equipment.

Our process includes, but is not limited to:

- Performing spot-checks on installed lights to ensure proper installation procedures are being followed.
- Manage installations daily and provide Real Time status updates of the project with an online dashboard view.
- Supporting our installation contractor Coutts Brothers and ensuring their work meets or exceeds all expectations.

Acquisition of Streetlights

Affinity LED Lighting has aligned with Jennifer Mazarro of CMP's Street lighting team and will easily lead the City of Sanford through the process of acquiring the lights from CMP Co.

A Customer Owned Street Lighting Agreement and Bill Of Sale with CMP is VERY EASY and while other proposers might make it sound complicated don't be fooled. We find all utilities have a policy of "No Check No Trucks", meaning the purchase execution is prerequisite to any LED conversion work. We look forward to help the City of Sanford with this important first step of the project.

Available grants and rebates relating to the LED conversion project - There are NO utility or Efficiency Maine incentives available for un-metered street lighting projects at this time. John Branagan of Affinity LED is an Efficiency Maine Qualified Partner.

Value Added Services

Our products are locally built by ***US Veterans only 21 miles and about 35 minutes from the City of Sanford.*** In fact, our entire team of partners, from GIS, lighting design, assembly, service, installation, maintenance and recycling are Northern New England Based. Affinity LED is putting a lot of good people from Maine, New Hampshire, and Vermont to work. That's more "*Doing Well and Doing Good!*".

Elimination Of Packaging Waste – See Appendix

GIS Services

The following is a response to items pertaining to **AUDIT**, through out this document you will see that a GIS is important for initial inventory verification and physical location, conducting basic lighting layout review, Utility (CMP) reconciliation and advance conversion tracking. This service is also the best practice for creating a dashboard for the City and Affinity to track the conversion in real time. Finally post conversion it is the best resource to report all final changes to CMP CO. for updated billing.

Affinity LED Lighting's GIS Project Team ("Project Team") includes our staff and our subcontractors from **VHB** (Vanasse Hangen Brustlin, Inc.) based in Bedford, NH & S. Portland, ME. Together we will make extensive use of GIS-based technology to support the entire project life-cycle. This task will include confirming the City-wide street light inventory via field collection audit using GIS-based mobile technologies, developing a comprehensive GIS database, and implementing web-based dashboard that will track the project from inventory to installation to finalization. Key tasks will include:

Geodatabase Design and Mobile Application Configuration
The Project Team will develop a street light Esri Geodatabase design and mobile data collection framework based on Esri's ArcGIS Online technology. Through this process a standardized database will be configured and implemented, data collection and condition assessment standards will be established, and a cloud-based, mobile data collection application (which runs on iOS and Android devices using ArcGIS Collector application) will be configured and implemented.

Field Data Collection and Street Light Audit
The Project Team will confirm your City's actual installed streetlight assets and gather additional attributes to aid in the conversion and Designed Lighting Retrofit plan using the mobile data collection tools and GIS database developed as part of the previous task. To complete this effort, we will make use of iPad mobile data collection devices running a custom-configured version of ArcGIS On-line's "Collector" application. As the field crew completes an audit, they will save the data, in real-time, to our cloud-based database. A web-based dashboard application will allow the project team to track progress (in real time), notify the project team of problems, and to support the installation process.

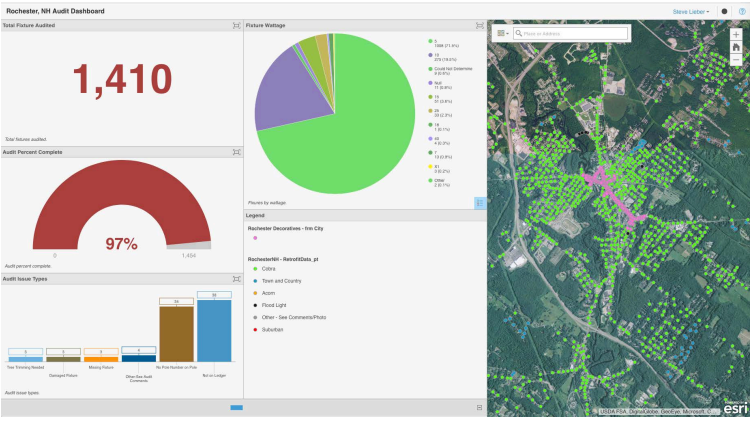

Inventory Reconciliation, Data Review , and Lighting Design Support
Upon completion of the inventory audit, the Project Team will conduct a quality review of the field audit data and complete a inventory reconciliation. During this process, we expect to reconfirm the City's current inventory, but may find a small percentage of street lights that either a) should be on the ledger but are not, or b) are on the ledger but should not be. The Affinity Team will work with you and CMP Co. to reconcile as many anomalies as possible and we will provide an "exceptions" list that can be used by the City to further refine the asset inventory. Once complete, the GIS database is also used to inform our certified lighting designer. By simply overlaying key data points to be considered in the creation of our designed retrofit the GIS process aids the designer and City Stakeholders in visualizing the resulting plan before the conversion begins.

Retrofit Project Tracking System
The Project Team will implement technologies that will support the conversion process. This will include supplying installation teams with the mobile data collection devices used to support the inventory process and development of a project tracking dashboard. As a conversion is completed, install crews will update the GIS database in real-time. A "Project Tracking Dashboard" will be implemented to allow all project stakeholders to track the process in real-time. This will allow Affinity to track progress, generate reports, and even provide weblinks to the public. The dashboard will be based on Esri's ArcGIS Online technology and will be viewable on any web-browser.

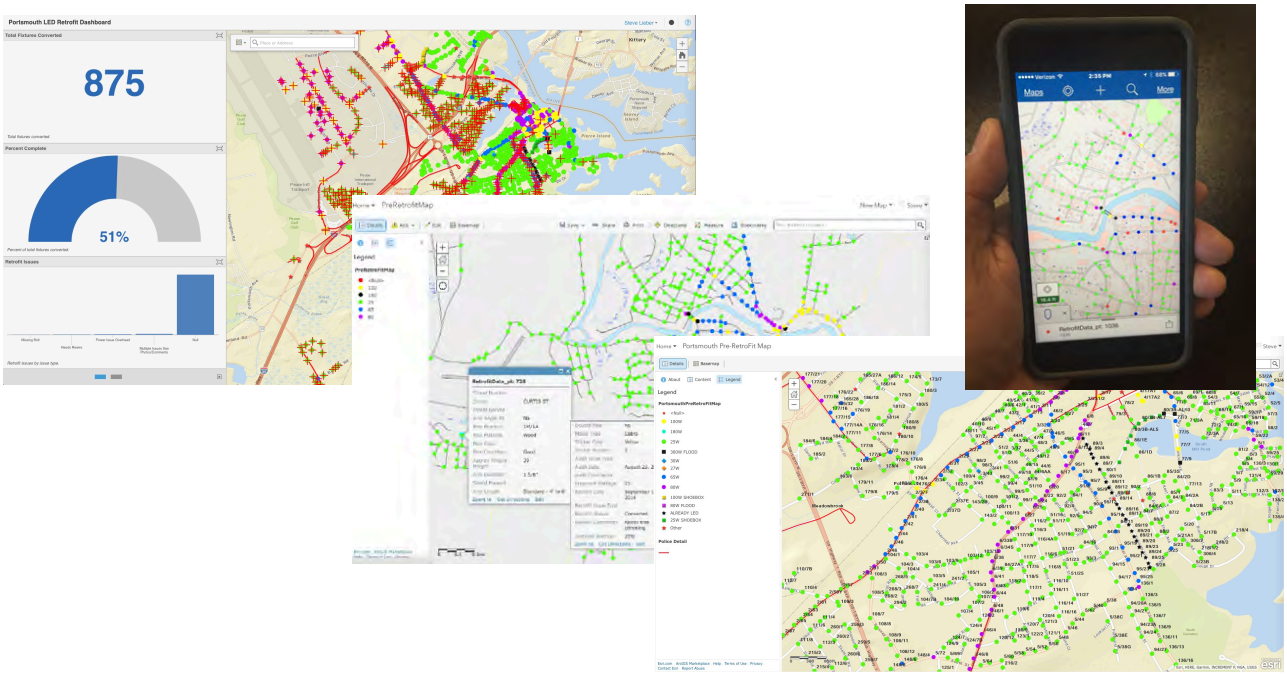

Final GIS Deliverable
The Affinity LED Team will finalize the GIS database and deliver it to you as a seamless, City-wide Esri File Geodatabase. This geodatabase will conform to the City's GIS standards and will easily integrate into your existing GIS system.

The result of this task will be a City-wide, street light Esri geodatabase and a web-based project tracking system that will allow the project team, you to view project status in real-time. This allows our Project Team to effectively communicate with all City stakeholders, track progress, and notify the City and CMP Co. of potential problem areas.

Warranty Statement

Affinity LED Light LLC
Street Lighting – 10 Year Limited Warranty Policy

This limited warranty is provided by Affinity LED Light LLC ("Seller") to Sanford, Maine ("Purchaser"), as the original purchaser of the LED street lighting products as identified on Seller's invoice reflecting its original purchase (the "Product"). Seller warrants that the Product, when delivered in new condition and in its original packaging, will be free of defects in material and workmanship for a period of **TEN (10) YEARS** from the date of original purchase. The determination of whether the Product is defective shall be made by the Seller, in its sole discretion, with consideration given to the overall performance of the Product. This limited warranty is void if the product is not used for the purpose for which it was designed.

A Product shall not be considered defective solely as a result of the failure of individual LED components to emit light if the number of inoperable components is 10% or less of the total number of LED components in the Product. If Seller determines the Product is defective, Seller will elect, in its sole discretion, to refund the purchase price of the Product, repair the Product, or replace the Product with a comparable product utilizing current technology at the time of replacement.

This limited warranty will not apply to loss or damage to the Product caused by: negligence; abuse; misuse; mishandling; improper installation, storage or maintenance; damage due to acts of God or nature; vandalism; civil disturbances; power surges; improper power supply; electrical current fluctuations; corrosive environment installations; unauthorized alteration/repair; accidents; failure to follow installation, operating, maintenance or environmental instructions prescribed by Seller or applicable electrical codes; or improper service of the Product performed by someone other than Seller or its authorized service provider.

This limited warranty includes field labor and service charges exclusively related to the repair or replacement of the Product determined defective, for a period of **ONE (1) YEAR** from the date of original purchase.

Seller will provide new products or parts in the warranty repair or replacement process, which will be warrantied for the remainder of the original warranty period. In order to make a warranty claim, Purchaser must notify Seller in writing within sixty (60) days after discovery of the defect and comply with Seller's other warranty requirements. Upon receiving that notice, Seller may require Purchaser to promptly return the Product to Seller, or its authorized service provider, freight prepaid. Before returning any product, a Returned Material Authorization should be obtained from the Seller, and the RMA # clearly marked on the return packaging. Failure to exercise the above RMA policy and procedures will void all warranty responsibilities on behalf of Affinity LED Light LLC.

The foregoing warranty provisions are exclusive and are given and accepted in lieu of any and all other warranties, whether expressed or implied, including without limitation any warranty against infringement and any implied warranties of merchantability or fitness for a particular purpose. In no event shall Seller be liable for incidental, compensatory, consequential, indirect, special, or other damages. Seller's aggregate liability with respect to a defective product shall in any event be limited to the monies paid to Seller for that defective product. This warranty is effective for purchases of Products on or after the effective date set forth below. Seller reserves the right to modify this warranty from time to time. Any modification of this warranty shall be effective for all orders placed with Seller on or after the effective date of such revised warranty.

Effective Date: Upon Contract / Invoice Date

affinity led lighting

Sanford Maine

Elimination of Product Packaging Solid Waste

"Sanford , Maine avoids 1,253 lbs. of solid waste and 694 lbs of CO2 during their LED Streetlight installation with Affinity LED"

Our view of doing business often inspires us to make decisions that cannot be measured in dollars and cents alone. We are taking steps to reduce packaging waste, which has become a common byproduct in industries like ours. Our decision directly lessens the burden on recycling centers and landfills, which further reduces greenhouse gas emissions and supports improved air quality and public health in our local communities. We founded our company on this belief, that...

Doing Well and Doing Good **are not mutually exclusive business goals.**

In the spirit of *Doing Good*, we have introduced the use of round-trip reusable totes for transporting our locally U.S. Veteran produced S800 Series Cobraheads from our UL Approved Manufacturing Site in Dover, NH to the cities and towns where our streetlights are being installed. Our decision results in the elimination of corrugated cartons and other packing materials, which would otherwise enter the waste stream… quite the opposite result of our intent for environmentally-beneficial LED lighting conversions.

Each one-time use package that we don't use equals the avoidance of 1.5 lbs of solid waste and 0.831 lbs. of C02*. We've also experienced that the reduction of one-time use packaging has made our installation process more efficient, saving time and energy by avoiding trips to offload waste.

While our industry colleagues will ask "where to place the cardboard dumpster?" - We don't need one!

(L to R) Steve Lieber, President, Affinity LED - Randy Dixon, Sr. Engineer, Eversource - Vic St. Pierre, DPW Director, Claremont, NH

*carbon footprint calculation tool commissioned by the Corrugated Packaging Alliance (CPA)

AMERICAN BUILT

ASSEMBLED WITH PRIDE BY US VETERANS IN DOVER, NEW HAMPSHIRE

affinity led lighting

AMERICAN BUILT

ASSEMBLED WITH PRIDE BY US VETERANS IN DOVER, NEW HAMPSHIRE

S900D Series DOB Roadway Luminaire

LED Street & Area Lighting

The S900D Series distills the benefits of combining industry-leading components and extended lifetime DIRECT AC LED technology (DOB) with pragmatic design and American-Built reliability. The outstanding photometric performance results in sites with excellent uniformity, allowing greater pole spacing and lower power density. The S900D Series is the industry's best alternative available for traditional street and area lighting with quick payback and improved performance.

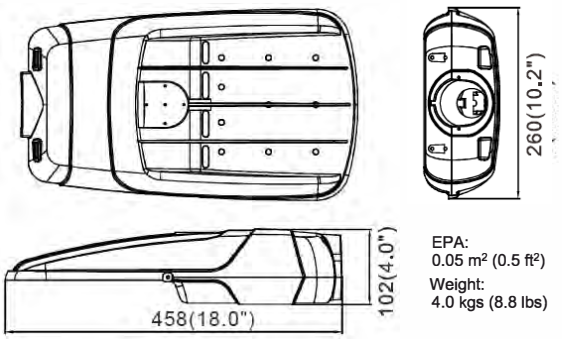

EPA:
0.05 m² (0.5 ft²)
Weight:
4.0 kgs (8.8 lbs)

Standard Features

- ★ Revolutionary Patented ***Multi-Volt DOB*** Technology Eliminates Drivers and Extends Lifetime
- ★ Seoul Semiconductor's new MJT High Powered Series provides Industry Leading Efficiency & Lifetimes
- ★ LED Lifetime Rating > 170,000 hours L7O @55°C (per IESNA TM-21-11)
- ★ Night Sky Friendly (zero uplight) with integrated backlight-shield
- ★ Reduced-glare optical lenses standard in Type II, Type III and Type V photometric distributions
- ★ Available in 3000K, 4000K and 5000K Correlated Color Temperatures
- ★ Tool-Less Entry with Connect-Safe™ for Lineman Friendly installation
- ★ Die-Cast Aluminum Housing and Housing Door with Ultra-durable powder-coat finish that resists corrosion, abrasion and UV-degradation
- ★ Integrated Tilt Adjustment ±5°
- ★ Built-in Bird-Guard
- ★ Input Voltage: 120-277V, 50/60Hz
- ★ Ambient Operating Temperatures -40°C to +50°C
- ★ Smart Ready with 7-pin Photocontrol Receptacle (per ANSI C136.41) and 0-10V Dimming Capability
- ★ 10-Year Limited Warranty

Product Specifications (S900D - S903D)

Example: S90XD-XXW-XXK-TX-XX ⇨ S901D-50W-30K-T2-GR

MODEL	POWER	COLOR TEMP (CCT)	DISTRIBUTION	FINISH
S900D	18W	30K: 3000K 40K: 4000K 50K: 5000K	T2: TYPE II T3: TYPE III T5: TYPE V	BR: BRONZE BL: BLACK WH: WHITE GR: GREY SL: SILVER
S900D	25W			
S901D	50W			
S902D	75W			
S903D	100W			

S900D - S903D Performance Data

Lumen Output

Lumen values are from photometric tests performed in accordance with IESNA LM-79-08. Data is considered to be representative of the configurations shown, within the tolerances allowed by Lighting Facts. Actual performance may differ as a result of end user environment and application. Actual wattage may differ by +/-10% when operating between 120-277V +/-10%. Contact us directly for performance data on any configurations not shown here.

MODEL	SYSTEM WATTS	INPUT CURRENT	DIST TYPE	4000K				
				LUMENS	B	U	G	LPW
S900D	18W	155mA	T2	2430	1	0	1	135
S900D	25W	210mA	T2	3467	1	0	1	139
S901D	50W	410mA	T2	6134	2	0	2	126
S902D	75W	645mA	T2	9721	2	0	2	126
S903D	100W	785mA	T2	11348	3	0	3	121

Certifications and Qualifications

- ★ DesignLights Consortium® Qualified Products Listed (DLC QPL)
- ★ UL® Certified Manufacturing Site in Dover, NH
- ★ Certified Electrical & Photometric Measurements (per IESNA LM-79-08)
- ★ Certified to ANSI C136.31-2001 3G Bridge & Overpass Vibration standards
- ★ 10Kv Surge Suppression Protection tested in accordance with IEEE/ANSI C62.41.2
- ★ Luminaire & finish endurance tested to ASTM B1117-11 Salty Fog test standards
- ★ Additional Powder-Coating Strength & Adhesion testing (meets ASTM D454/D522 standards)
- ★ Suitable for Wet Location, meets IP66 (per IEC 60529-2013 standards)
- ★ Meets FCC Part15, Subpart B, Class B per ANSI C63.4-2014
- ★ Meets International Dark Sky Association requirements for reduced glare, light trespass & light pollution
- ★ RoHS Compliant
- ★ American Built by U.S. Veterans

affinity led lighting

AFFINITY LED LIGHT LLC
1 Washington Street #5121, Dover, NH 03820
ph +1-978-378-LED8 (5338)
fax +1-603-590-8897
www.affinityledlight.com

AMERICAN BUILT

ASSEMBLED WITH PRIDE ★ BY US VETERANS ★ IN DOVER, NEW HAMPSHIRE

affinity led lighting

AMERICAN BUILT

ASSEMBLED WITH PRIDE BY US VETERANS IN DOVER, NEW HAMPSHIRE

S900D Series DOB Roadway Luminaire

LED Street & Area Lighting

The S900D Series distills the benefits of combining industry-leading components and extended lifetime DIRECT AC LED technology (DOB) with pragmatic design and American-Built reliability. The outstanding photometric performance results in sites with excellent uniformity, allowing greater pole spacing and lower power density. The S900D Series is the industry's best alternative available for traditional street and area lighting with quick payback and improved performance.

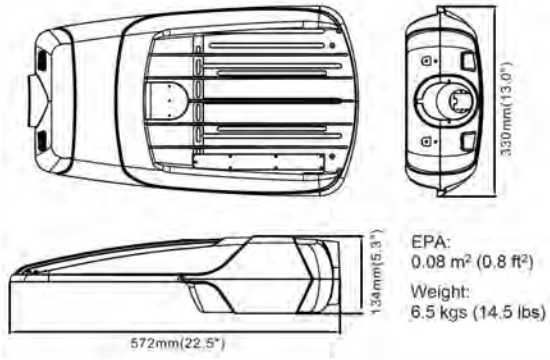

Standard Features

- ★ Revolutionary Patented ***Multi-Volt DOB*** Technology Eliminates Drivers and Extends Lifetime
- ★ Seoul Semiconductor's new MJT High Powered Series provides Industry Leading Efficiency & Lifetimes
- ★ LED Lifetime Rating > 170,000 hours L7O @55°C (per IESNA TM-21-11)
- ★ Night Sky Friendly (zero uplight) with integrated backlight-shield
- ★ Reduced-glare optical lenses standard in Type II, Type III and Type V photometric distributions
- ★ Available in 3000K, 4000K and 5000K Correlated Color Temperatures
- ★ Tool-Less Entry with Connect-Safe™ for Lineman Friendly installation
- ★ Die-Cast Aluminum Housing and Housing Door with Ultra-durable powder-coat finish that resists corrosion, abrasion and UV-degradation
- ★ Integrated Tilt Adjustment ±5°
- ★ Built-in Bird-Guard
- ★ Input Voltage: 120-277V, 50/60Hz
- ★ Ambient Operating Temperatures -40°C to +50°C
- ★ Smart Ready with 7-pin Photocontrol Receptacle (per ANSI C136.41) and 0-10V Dimming Capability
- ★ 10-Year Limited Warranty

Product Specifications (S904D - S906D)

Example: S90XD-XXW-XXK-TX-XX ⇨ S905D-120W-40K-T3-GR

MODEL	POWER	COLOR TEMP (CCT)	DISTRIBUTION	FINISH
S904D	120W	30K: 3000K 40K: 4000K 50K: 5000K	T2: TYPE II T3: TYPE III T5: TYPE V	BR: BRONZE BL: BLACK WH: WHITE GR: GREY SL: SILVER
S905D	150W			
S906D	200W			

S904D-S906D Performance Data

Lumen Output

Lumen values are from photometric tests performed in accordance with IESNA LM-79-08. Data is considered to be representative of the configurations shown, within the tolerances allowed by Lighting Facts. Actual performance may differ as a result of end user environment and application. Actual wattage may differ by +/-10% when operating between 120-277V +/-10%. Contact us directly for performance data on any configurations not shown here.

MODEL	SYSTEM WATTS	INPUT CURRENT	DIST TYPE	4000K				
				LUMENS	B	U	G	LPW
S904D	120W	1005mA	T2	15442	3	0	3	125
S905D	150W	1290mA	T2	18105	3	0	3	118
S906D	200W	1578mA	T2	22081	4	0	4	118

Certifications and Qualifications

- ★ DesignLights Consortium® Qualified Products Listed (DLC QPL)
- ★ UL® Certified Manufacturing Site in Dover, NH
- ★ Certified Electrical & Photometric Measurements (per IESNA LM-79-08)
- ★ Certified to ANSI C136.31-2001 3G Bridge & Overpass Vibration Standards
- ★ 10Kv Surge Suppression Protection tested in accordance with IEEE/ANSI C62.41.2
- ★ Luminaire & finish endurance tested to ASTM B1117-11 Salty Fog test standards
- ★ Additional Powder-Coating Strength & Adhesion testing (meets ASTM D454/D522 standards)
- ★ Suitable for Wet Location, meets IP66 (per IEC 60529-2013 standards)
- ★ Meets FCC Part15, Subpart B, Class B per ANSI C63.4-2014
- ★ Meets International Dark Sky Association requirements for reduced glare, light trespass & light pollution
- ★ RoHS Compliant
- ★ American Built by U.S. Veterans

affinity led lighting

AFFINITY LED LIGHT LLC
1 Washington Street #5121, Dover, NH 03820
ph +1-978-378-LED8 (5338)
fax +1-603-590-8897
www.affinityledlight.com

AMERICAN BUILT

ASSEMBLED WITH PRIDE ★ BY US VETERANS ★ IN DOVER, NEW HAMPSHIRE

affinity led lighting

AMERICAN BUILT

ASSEMBLED WITH PRIDE BY US VETERANS IN DOVER, NEW HAMPSHIRE

P900D Series DOB Luminaire

LED Parking Lot & Area Flood Lighting

The P900D Series distills the benefits of combining industry-leading components and extended lifetime DIRECT AC LED technology (DOB) with pragmatic design and American-Built reliability. The outstanding photometric performance results in sites with excellent uniformity, allowing greater pole spacing and lower power density. The P900D Series is the best alternative available for traditional parking lot and area lighting with quick payback and improved performance.

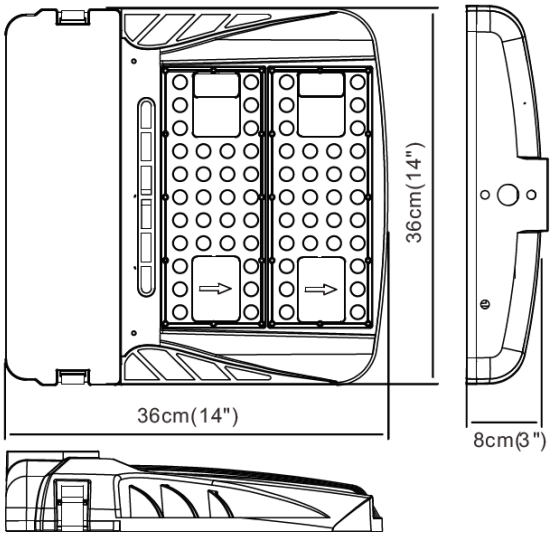

Standard Features

- ★ Revolutionary Patented ***Multi-Volt DOB*** Technology Eliminates Drivers and Extends Lifetime
- ★ Seoul Semiconductor's new MJT High Powered Series provides Industry Leading Efficiency & Lifetimes
- ★ LED Lifetime Rating > 170,000 hours L7O @55°C (per IESNA TM-21-11)
- ★ Night Sky Friendly (zero uplight)
- ★ Reduced-glare optical lenses standard in Type II, Type III, Type IV and Type V photometric distributions
- ★ Available in 3000K, 4000K and 5000K Correlated Color Temperatures
- ★ Die-Cast Aluminum Housing and Housing Door with Ultra-durable powder-coat finish that resists corrosion, abrasion and UV-degradation
- ★ Available in Bronze, Black, Grey, White and Silver
- ★ Built-in Bird-Guard
- ★ Input Voltage: 120-277V, 50/60Hz
- ★ Ambient Operating Temperatures -40°C to +50°C
- ★ Smart Ready with 7-pin Photocontrol Receptacle (per ANSI C136.41) and 0-10V Dimming Capability
- ★ 5-Year Limited Warranty

Product Specifications (P904D - P905D)

Example: P90XD-XXXW-XXK-TX-XX-XX-XXX ⇨ P904D-150W-40K-T4-NP-BR-SPM

MODEL	POWER	COLOR TEMP (CCT)	DISTRIBUTION	CONTROL OPTION	FINISH	MOUNTING
P904D	150W	30K: 3000K 40K: 4000K 50K: 5000K	T2: TYPE II T3: TYPE III T4: TYPE IV T5: TYPE V	Nx: NON-DIM Sx: SMART READY xN: NO PHOTOCELL xP: PHOTOCELL	BR: BRONZE BL: BLACK WH: WHITE GR: GREY SL: SILVER	SPM: SQUARE POLE RPM: ROUND POLE TNM: TRUNNION SFM: SLIP FIT
P905D	200W					

P904D - P905D Series Performance Data

Lumen Output

Lumen values are from photometric tests performed in accordance with IESNA LM-79-08. Data is considered to be representative of the configurations shown, within the tolerances allowed by Lighting Facts. Actual performance may differ as a result of end user environment and application. Actual wattage may differ by +/-10% when operating between 120-277V +/-10%. Contact us directly for performance data on any configurations not shown here.

MODEL	SYSTEM WATTS	INPUT CURRENT	DIST TYPE	4000K				
				LUMENS	B	U	G	LPW
P904D	150W	1290mA	T3	18775	2	0	2	122
P906D	200W	1578mA	T3	21676	3	0	3	116

Certifications & Qualifications

- ★ DesignLights Consortium® Qualified Products Listed (DLC QPL)
- ★ UL® Certified Manufacturing Site in Dover, NH
- ★ Certified Electrical & Photometric Measurements (per IESNA LM-79-08)
- ★ Certified to ANSI C136.31-2001 3G Bridge & Overpass Vibration standards
- ★ 10Kv Surge Suppression Protection tested in accordance with IEEE/ANSI C62.41.2
- ★ Luminaire & finish endurance tested to ASTM B1117-11 Salty Fog test standards
- ★ Additional Powder-Coating Strength & Adhesion testing (meets ASTM D454/D522 standards)
- ★ Suitable for Wet Location, meets IP66 (per IEC 60529-2013 standards)
- ★ Meets FCC Part15, Subpart B, Class B per ANSI C63.4-2014
- ★ Meets International Dark Sky Association requirements for reduced glare, light trespass & light pollution
- ★ RoHS Compliant
- ★ American Built by U.S. Veterans

affinity led lighting

AFFINITY LED LIGHT LLC
1 Washington Street #5121, Dover, NH 03820
ph +1-978-378-LED8 (5338)
fax +1-603-590-8897
www.affinityledlight.com

AMERICAN BUILT

ASSEMBLED WITH PRIDE ★ BY US VETERANS ★ IN DOVER, NEW HAMPSHIRE

affinity led lighting

AMERICAN BUILT

ASSEMBLED WITH PRIDE BY US VETERANS IN DOVER, NEW HAMPSHIRE

P900D Series DOB Luminaire

LED Parking Lot & Area Flood Lighting

The P900D Series distills the benefits of combining industry-leading components and extended lifetime DIRECT AC LED technology (DOB) with pragmatic design and American-Built reliability. The outstanding photometric performance results in sites with excellent uniformity, allowing greater pole spacing and lower power density. The P900D Series is the best alternative available for traditional parking lot and area lighting with quick payback and improved performance.

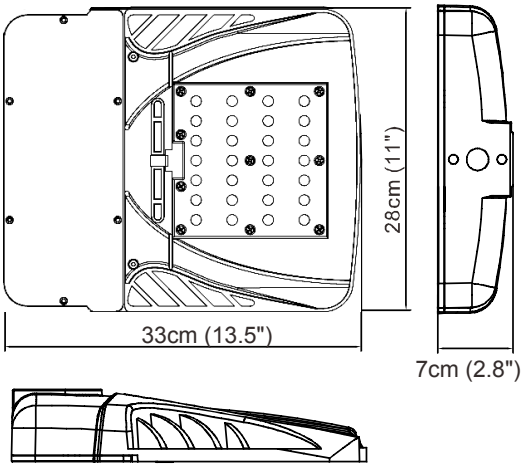

Standard Features

- ★ Revolutionary Patented ***Multi-Volt DOB*** Technology Eliminates Drivers and Extends Lifetime
- ★ Seoul Semiconductor's new MJT High Powered Series provides Industry Leading Efficiency & Lifetimes
- ★ LED Lifetime Rating > 170,000 hours L7O @55°C (per IESNA TM-21-11)
- ★ Night Sky Friendly (zero uplight)
- ★ Reduced-glare optical lenses standard in Type II, Type III, Type IV and Type V photometric distributions
- ★ Available in 3000K, 4000K and 5000K Correlated Color Temperatures
- ★ Die-Cast Aluminum Housing and Housing Door with Ultra-durable powder-coat finish that resists corrosion, abrasion and UV-degradation
- ★ Available in Bronze, Black, Grey, White and Silver
- ★ Built-in Bird-Guard
- ★ Input Voltage: 120-277V, 50/60Hz
- ★ Ambient Operating Temperatures -40°C to +50°C
- ★ Smart Ready with 7-pin Photocontrol Receptacle (per ANSI C136.41) and 0-10V Dimming Capability
- ★ 5-Year Limited Warranty

Product Specifications (P900D - P903D)

Example: P90XD-XXW-XXK-TX-XX-XX-XXX ⇨ P901D-50W-40K-T4-NP-BR-SPM

MODEL	POWER	COLOR TEMP (CCT)	DISTRIBUTION	CONTROL OPTION	FINISH	MOUNTING
P900D	18W	30K: 3000K 40K: 4000K 50K: 5000K	T2: TYPE II T3: TYPE III T4: TYPE IV T5: TYPE V	Nx: NON-DIM Sx: SMART READY xN: NO PHOTOCELL xP: PHOTOCELL	BR: BRONZE BL: BLACK WH: WHITE GR: GREY SL: SILVER	SPM: SQUARE POLE RPM: ROUND POLE TNM: TRUNNION SFM: SLIP FIT
P900D	25W					
P901D	50W					
P902D	75W					
P903D	100W					

P900D - P903D Series Performance Data

Lumen Output

Lumen values are from photometric tests performed in accordance with IESNA LM-79-08. Data is considered to be representative of the configurations shown, within the tolerances allowed by Lighting Facts. Actual performance may differ as a result of end user environment and application. Actual wattage may differ by +/-10% when operating between 120-277V +/-10%. Contact us directly for performance data on any configurations not shown here.

MODEL	SYSTEM WATTS	INPUT CURRENT	DIST TYPE	4000K				
				LUMENS	B	U	G	LPW
P900D	18W	155mA	T3	2430	1	0	1	135
P900D	25W	210mA	T3	3536	1	0	1	141
P901D	50W	410mA	T3	6226	1	0	1	129
P902D	75W	645mA	T3	10087	2	0	2	133
P903D	100W	785mA	T3	11831	2	0	2	126

Certifications & Qualifications

- ★ DesignLights Consortium® Qualified Products Listed (DLC QPL)
- ★ UL® Certified Manufacturing Site in Dover, NH
- ★ Certified Electrical & Photometric Measurements (per IESNA LM-79-08)
- ★ Certified to ANSI C136.31-2001 3G Bridge & Overpass Vibration standards
- ★ 10Kv Surge Suppression Protection tested in accordance with IEEE/ANSI C62.41.2
- ★ Luminaire & finish endurance tested to ASTM B1117-11 Salty Fog test standards
- ★ Additional Powder-Coating Strength & Adhesion testing (meets ASTM D454/D522 standards)
- ★ Suitable for Wet Location, meets IP66 (per IEC 60529-2013 standards)
- ★ Meets FCC Part15, Subpart B, Class B per ANSI C63.4-2014
- ★ Meets International Dark Sky Association requirements for reduced glare, light trespass & light pollution
- ★ RoHS Compliant
- ★ American Built by U.S. Veterans

affinity led lighting

AFFINITY LED LIGHT LLC
1 Washington Street #5121, Dover, NH 03820
ph +1-978-378-LED8 (5338)
fax +1-603-590-8897
www.affinityledlight.com

AMERICAN BUILT

ASSEMBLED WITH PRIDE ★ BY US VETERANS ★ IN DOVER, NEW HAMPSHIRE

36W Dark Sky Post Top Lamp

PT6DS-36W-XXK

Product Description

Affinity LED Lighting's newest "Dark Sky Friendly" design for LED Post Top Lamps provides reliable, energy efficient LED area lighting, without the need for costly replacements of existing decorative luminaires.

Product Specifications

Type	Post Top Lamp	Model number	PT6DS-36W-XXK
Equivalent to	100-150W HID	Operating Temp	-39℃~60℃
Wattage	36W	L70 Lifetime	>50,000Hrs
Lumen	3700lm	CRI	Ra≥80
Voltage	100-277V	L x Diameter	>216mm x 87mm
CCT	3000-5000K	Weight	800g (2.1bs)
Power factor	>92%	Current	139mA
Beam angle	180°		

Features & Applications

- Rated lamp life 50,000Hrs
- No mercury, no IR or UV, reduces energy cost up to 70%
- Five years warranty
- Perfect alternative to MH & HPS Installations
- Yard Light relamp
- Flood Light relamp
- Decorative relamp

Packing details

Packaging Type	Master Carton (1pcs)
Dimensions (L x W x H)	240 x 93 x 93mm

affinity led lighting

36W Dark Sky Post Top Lamp

PT6DS-36W-XXK

Product Advantages

High efficiency LG SMD5630 LED's

6063 Aluminum Heat Sink Cooling

Unique Isolated Driver Design

Dark Sky Friendly 180º Beam Angle

IP64 Rated Design

Installation

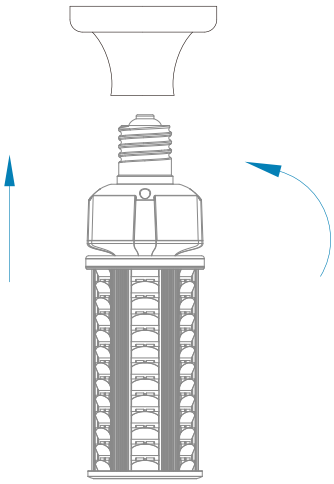

Step:1

Shown as Figure 1
Turn off the power before installation.

Remove the old ballast, capacitor and ignitor(if existing)

Step:2

Shown as Figure 2
Make sure the Alternating Current Wires connect to the E26 or E39 socket directly. (Reattach or replace ground lead if one is needed)

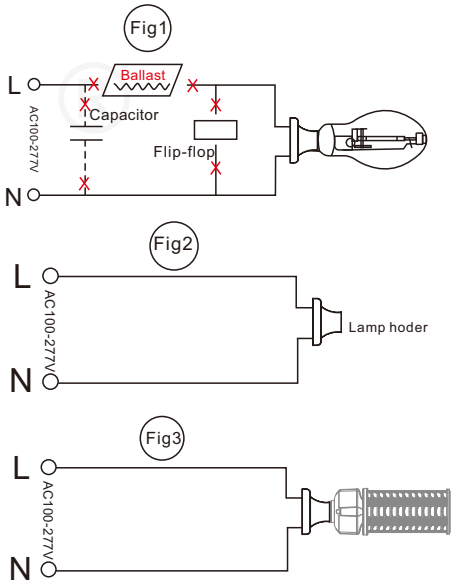

Model Number	Watt	Lumen	CCT	DLC
PT6DS-36W-XXK	**36W**	**3700 lm**	**3000K-5000K**	**YES**

Certifications

LM79 LM80

KIT FTSC25SCO 2L900N 10A

Technical Data Sheet

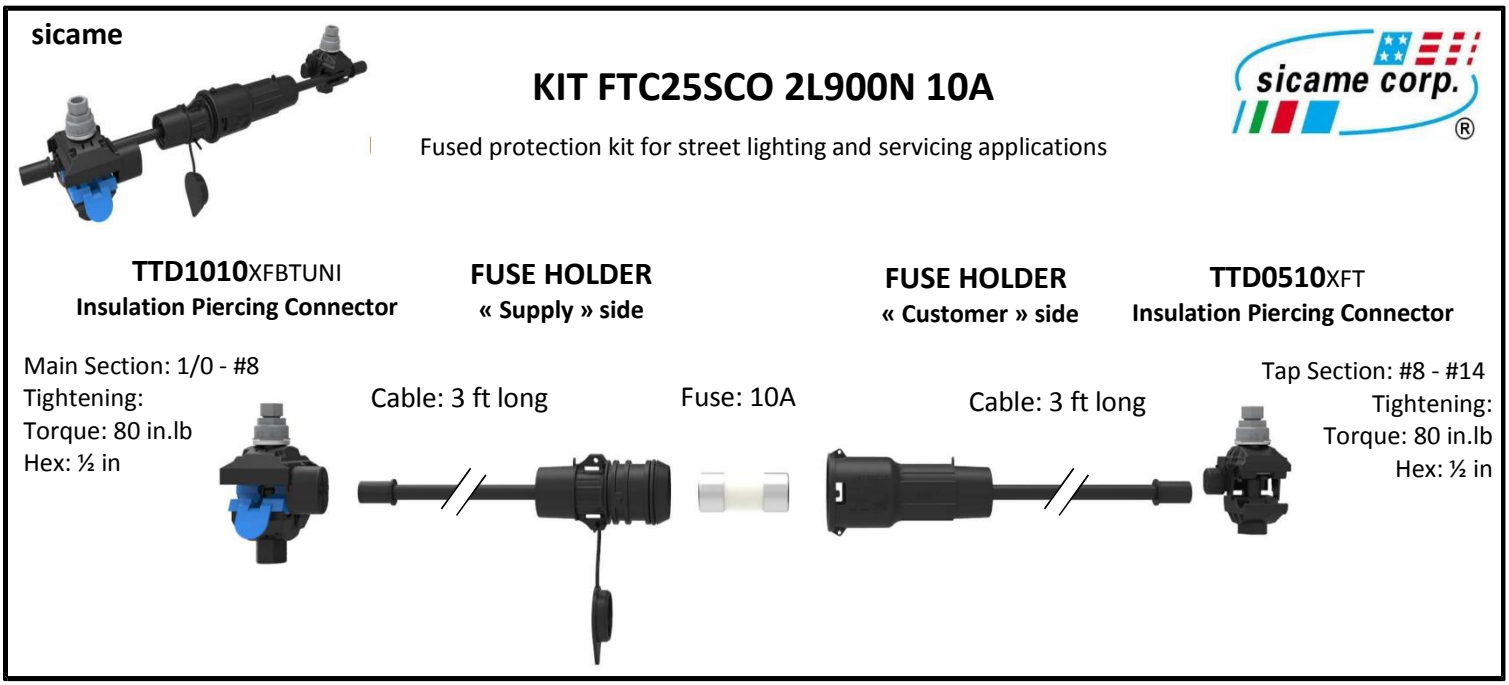

A	04/26/2017	V. Rineau	File creation
Rev.	**Date**	**Written by**	**Comments**

SICAME S.A. – CAPITAL 8 392 320 € – S.A. A DIRECTOIRE ET CONSEIL DE SURVEILLANCE – R.C.S. BRIVE B 675 520 415 – France

Summary

1. Product description 2
2. General part description 2
3. Product technical characteristics 3
4. Fuse Holder Installation Instriuction 3

1. PRODUCT DESCRIPTION

The KIT FTSC25SCO 2L900N 10A is a cut-out fuse holder kit for overhead servicing to protect the service line or the public lighting network (with a fuse cartridge), connect or disconnect a customer (on load up to 63Amps), and limit non-technical losses (anti-theft solution with a mini-switch). Once installed, his cutout fuse holder provides a watertight connection and is insulated 6kV under water. This product comes with all the benefits of Sicame ABC accessories such as torque controlled shear bolts and soft end caps for the cables' ends.

2. GENERAL PART DESCRIPTION

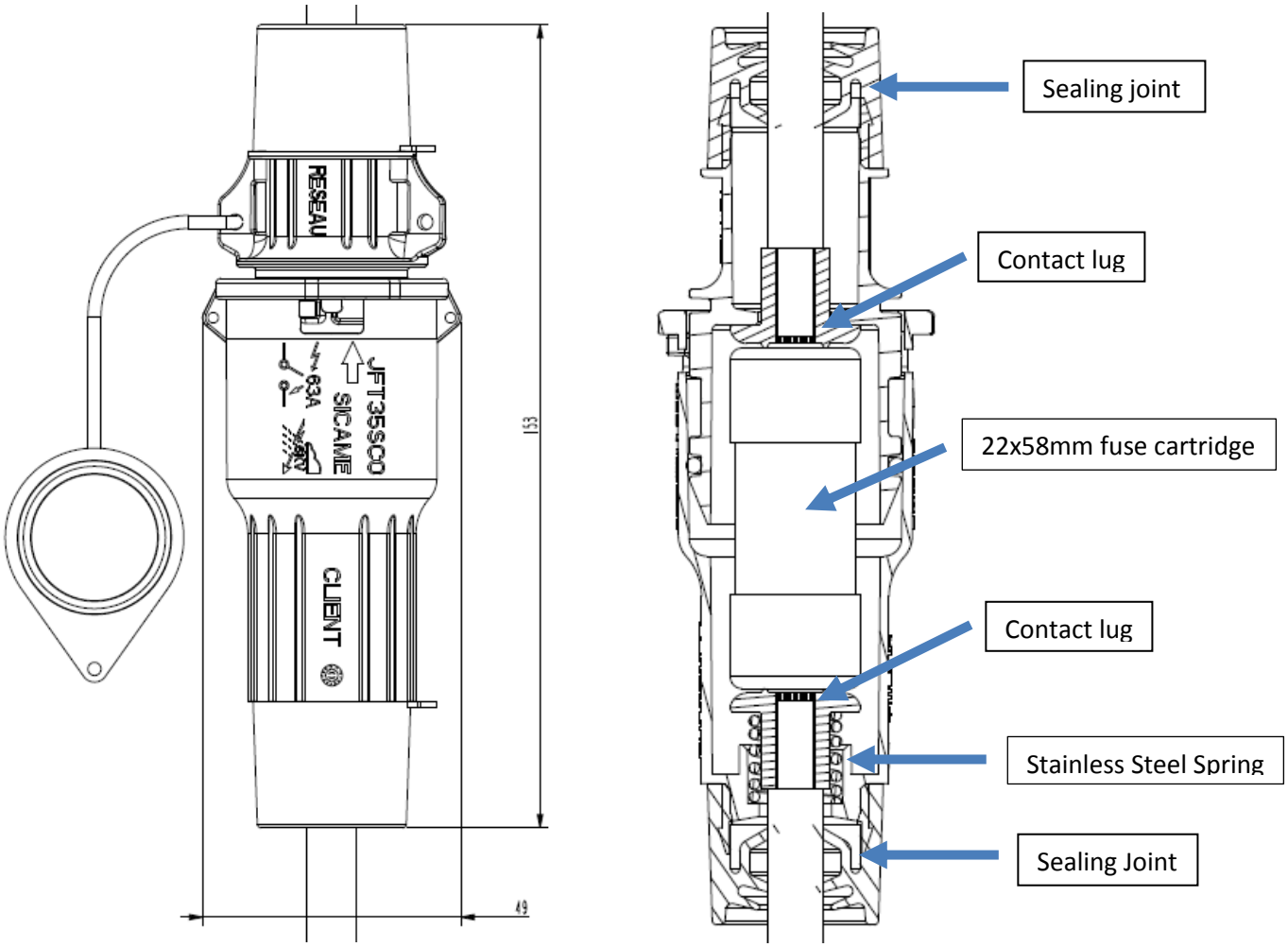

SICAME S.A. – CAPITAL 8 392 320 € – S.A. A DIRECTOIRE ET CONSEIL DE SURVEILLANCE – R.C.S. BRIVE B 675 520 415 – France

3. PRODUCT TECHNICAL CHARACTERISTICS

Description	Results
Product standards	Fuse holder : STS 0032 (Sicame Technical Specification based on BS EN 50483, HN 33-S-83 Connectors : ANSI C119.5, UL 486A, , NF C33-020:2013, and BS EN 50483
Rated voltage	1kV
Insulated Level	6kV under water
Fuse Dimensions	22 x 58mm
Rated Torque	Connectors: 80 in.lb
Fuse Holder Weight	~196g (without fuse)
Insulation Piercing Connector Features	1) Watertight 2) Fully Insulated- No cover needed 3) No stripping required 4) Torque controlled shear heads (impact wrench compatible) 5) Admissible cross sections: 1/0 - #8 on network side, #8 - #14 on branching side
Size of the tightening hex	½”
Plastic Requirement	Shock proof and suitable for outdoor use and UV stable
Technical/Safety Features	1) Fuse is captive on load side 2) Bayonet system opening for securing the closed position- no tools needed 3) Small diameter and finger positions for ease of use with glove operations 4) Watertight and Anti-corrosion 5) Slots for 9mm wide cable ties to secure assembly on the pole 6) On-load connection/disconnection up to 63A 7) Cables come with soft end caps 8) Safety seals allow the lead wires to seal product in opened or closed configurations
Product overall dimension: Length x Width	153 x 49 mm

4. INSTALLATION INSTRUCTIONS

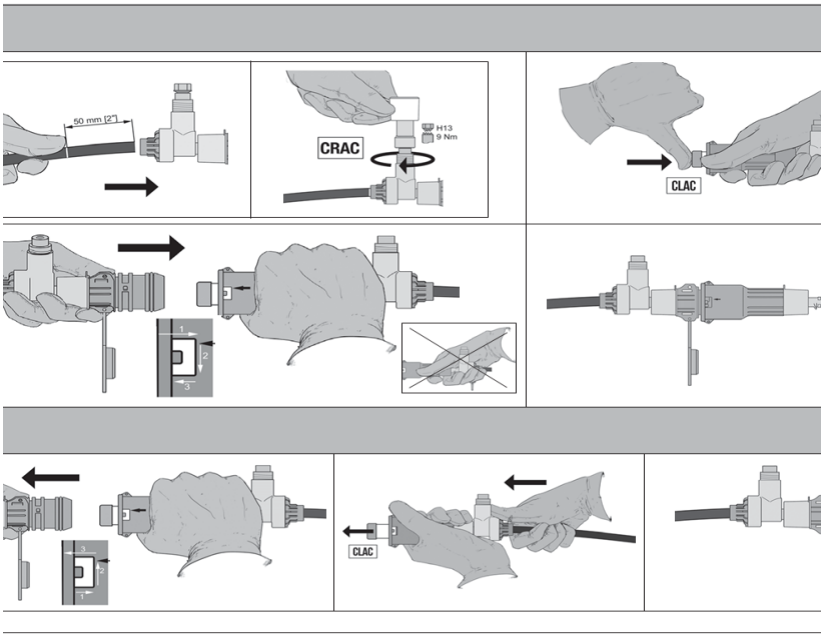

SICAME S.A. – CAPITAL 8 392 320 € – S.A. A DIRECTOIRE ET CONSEIL DE SURVEILLANCE – R.C.S. BRIVE B 675 520 415 – France

Add smart, full-featured controls to your street lights.

Data sheet

Light Sense node for Intelligent Lighting

Light Sense node is designed to convert LED fixtures into intelligent focal centers, providing actionable insights that go far beyond illumination and mere granular lighting control. Our Smart Communities solutions and cloud-based IoT services are now at your fingertips.

Main features.

- Cellular connectivity enables gateway-free installation
- Advanced 4G LTE CAT-M IoT technology
- Auto-commissioning with integrated GPS
- Simple plug-and-twist mounting to luminaires via existing National Electrical Manufacturers Association (NEMA) 5- or 7-pin photo-control socket in accordance with American National Standards Institute (ANSI) C136.41
- Advanced lighting control with on-board photocell and (voltage) 0-10V dimming
- Utility-grade energy measurement with metering Class 0.5 accuracy
- Measures and reports electrical and sensor data to NetSense® Lighting Application

Advanced 4G LTE IoT CAT-M IoT connectivity
No additional networking equipment is needed to deploy with 4G LTE connectivity. Fast, reliable, and nationwide 4G LTE connectivity from Verizon Wireless allows for gateway-free deployment.

Lighting control
Light Sense node is connected to incoming AC mains and the LED driver/standard ballast. This direct connection provides on/off control and performance monitoring of the luminaire. Luminaire dimming control follows the 0-10VDC dimming standard.

Onboard sensors
Light Sense node sensors include: GPS, photocell, utility-grade power metering and temperature.

Security
Light Sense node connects to the network using highly secure, certificate-based authentication and encryption for each device.

Certifications
Underwriters Laboratories (UL), Federal Communications Commission (FCC)

Product specifications

Order code	S80-000123
Communication	
Communication	Cellular (4G LTE) Lightweight machine-to-machine (LwM2M) protocol
LTE frequency bands	LTE band 4 and 13
Cellular data rate	LTE CAT-M
Security	
Encryption	DTLS1.2 PSK with 256-bit AES encryption
Power and electrical	
AC input voltage	120-277V/60Hz
Node power consumption	1.0W Typical (1.2W max)
Surge rating	6KV/3kA ANSI C136.2
Energy measurement	Metering accuracy ANSI C12.20 Class 0.5 (relevant sections), IR Pulse LED Support for energy measurement
On-board sensors	Photocell, GPS, power metering, temperature
GPS accuracy	3m (clear open sky)
LED Luminaire Control	
Ballast rating	E-fBallast and Standard/HID Ballast* rating of 5A max at 120V/277V 60Hz
Dimming control output	0-10 VDC
Photocell	
Operating levels	ANSI C136.10 Turn-on typical at 16 Lux, turn-off typical at 24 Lux, (On:Off ratio of 1:1.5)
Physical	
Mounting	Twist-lock National Electrical Manufacturers Association (NEMA) photo-receptacle (ANSI C136.41) 5-wire/7-wire receptacle
Weight	0.6 lbs
Color	Light gray
Dimensions	107.2 mm height x 88.6mm diameter
Environmental and compliance	
Water ingress	IP66, UL773 wet rated
Vibration	3G vibration per ANSI C136.31 2010
Operating temperature	-40C to 55C
Relative humidity operating range	5% to 95% non-condensing
Certifications	UL, FCC
Region of certification and LTE operation	USA

** For Standard/HID Luminaires support the luminaire must have main AC entry SPD rated at ANSI C136.2-2018 20kV/10kA*

Mechanical dimensions

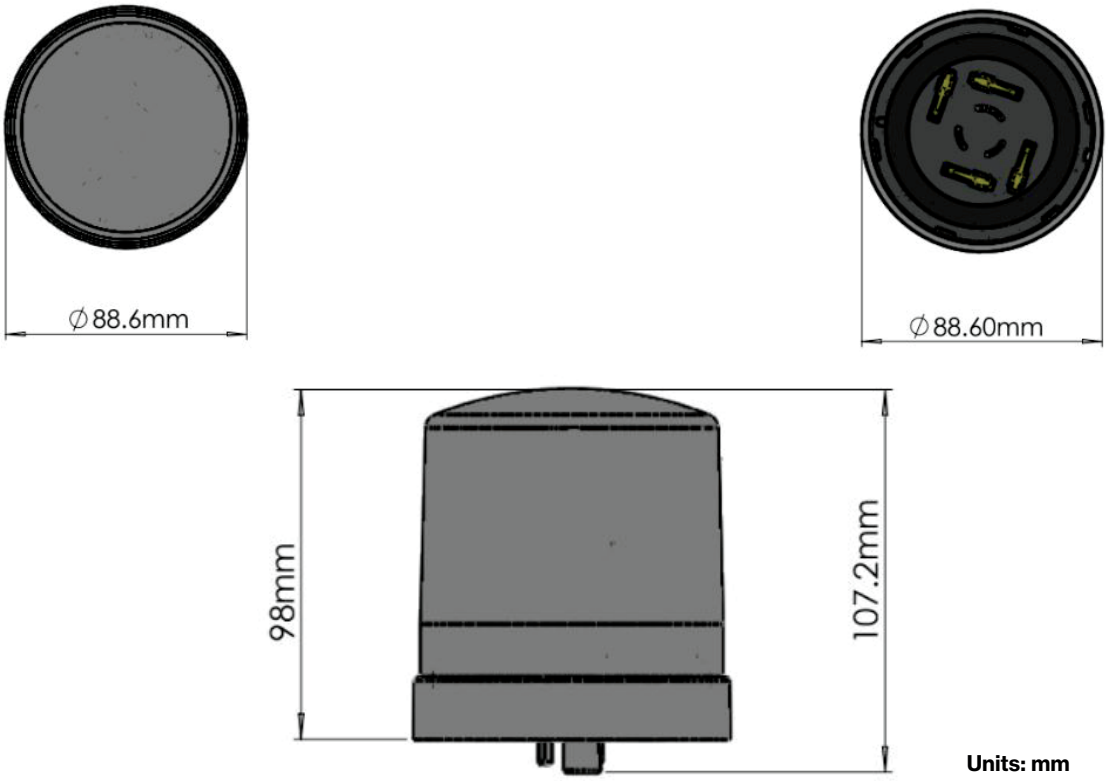

Units: mm

Ordering information

Order code	Description
S80-000123	Light Sense node, 4G LTE, 0-10V, NEMA, 120-277V

Put brighter ideas to work.

What if you could do even more than reduce energy costs?

verizon

Solution brief

Everyday street lamps use a lot of power. That's why many municipalities and businesses are upgrading their aging street-lighting infrastructures with energy-efficient LEDs and smart controls. With the right solution, you can save millions of dollars in energy and maintenance each year, while gaining increased control, actionable data and even additional income.

Verizon Intelligent Lighting is a versatile, energy-efficient alternative to traditional street lights. The cloud-based platform enables both manual and automated control of lights, and transforms fixtures into smart technology hubs that capture and transmit data in near real time.

Gain new control, capabilities and insights.

Verizon Intelligent Lighting makes it possible to regulate light levels in ways you never imagined. You can control them manually, both individually and by group, or you can program them, using features like scheduling and photo-control.

The platform enables new capabilities, too, including monitoring, diagnostics and alerting, as well as utility-grade energy metering. That means no more driving around searching for failed lights or auditing inventory, so you save time and money on maintenance. That's in addition to the energy savings.

Plus, Verizon Intelligent Lighting is easy to install and commission. And no gateway to troubleshoot means no IT support is needed.

For additional control and system flexibility, NetSense™ Lighting application programming interfaces (APIs) allow you to create your own lighting control interfaces, in addition to the existing NetSense Lighting application user interface provided by Verizon.

Both the NetSense Lighting application user interface and the APIs provide the following functionalities:

- Node and lighting control
- Node setup
- Node commissioning
- Lighting scheduling setup
- Asset management
- Status monitoring
- Energy reports

Increase public safety and engagement—and revenue.

With Verizon Intelligent Lighting, you can improve community safety with:

- Crisp, white LED lights that help people see more clearly
- Lights that are on when and where they are needed
- Internet of Things (IoT)–connected nodes that can broadcast notifications

Be Future-ready with the Verizon City Hub.

For a smart and forward-thinking start to your intelligent street-lighting project, you can begin with the Verizon City Hub. It's a smart, LTE/Wi-Fi–enabled device that:

- Simplifies power and connectivity for intelligent street lights and other IoT devices
- Adds high-bandwidth, edge-processing capabilities
- Provides a platform for future smart cities and communities solutions

With our City Hub, you can easily perform advanced lighting control, as well as add sensors such as Video Node 4K for video analytics, Intersection Safety Analytics and Parking Optimization. In addition, the City Hub is equipped with Power over Ethernet (PoE) and audio connectors that can support a variety of future smart solutions.

Why Verizon

When it comes to community infrastructure, the network matters. We're America's largest and most reliable 4G LTE network. And we're hard at work putting together the nation's most advanced 5G network.

Plus, we can deploy at any level, from end-to-end, city-wide solutions, to individual business projects. We'll match our solution to your needs—and your budget.

Verizon Intelligent Lighting bundle options:

- Verizon City Hub or LTE Core Node
- NetSense Lighting APIs
- Connectivity software/application
- Professional Services

70%

Some communities are showing even greater energy savings – as much as 70% more with lighting controls.*

Contact Verizon.

To learn more about Verizon Intelligent Lighting, please contact your Verizon Wireless business specialist.

* Dan Utech, "Launching the Presidential Challenge for Advanced Outdoor Lighting," The White House Briefing Room Blog, January 23, 2015.

Network details & coverage maps at vzw.com. © 2018 Verizon. SB1640818

affinity
led lighting

Your Local Team for Lighting Efficiency

Our dedicated staff at Affinity LED Lighting, **New England's only lighting manufacturer**, are committed to saving communities across New England up to 90% on their energy bills through LED upgrades.

Why have **58** local communities trusted Affinity LED for their municipal lighting conversion projects?

Because we are committed to providing our clients with the **highest quality American Built products** at the lowest cost, **safely and professionally installed** in and environmentally-friendly way.

That's ***Doing Well and Doing Good!***

Photo courtesy of Matthew Nazar, City of Augusta

To find out how Affinity LED can
Do Well and Do Good
for your community,
Call Us! (978) 378-LED8
affinityLEDlight.com

AMERICAN BUILT

ASSEMBLED WITH PRIDE
BY US VETERANS
IN DOVER, NEW HAMPSHIRE